DC COMICS AIR HOCKEY

Air Hockey Table Owner’s Manual.

Assembly, operation and care instructions.

Contents

Foreword 2
Product Specifications 2
Before Assembling 3
Tools required for Assembling* 3
Product Parts 4
1. For Legs 4
2. For Protection Acrylic 4
3. For Player 5
Assembly Procedures 6
Safety Instructions for Use and Play 10
Hardware and Software Configuration 11
Hardware Descriptions 11
Hardware Specifications 12
Software Specifications 13
Menu Diagram: 14
Parts 15
Cabinet parts 15
Cash Box and Tickets Parts (Arcade Version Only) 16
Electronics 17
Decal Prints 18
Consumable Parts 19

Foreword

We would like to thank you very much for purchasing the DC COMICS Air Hockey from Bandai Namco Amusement America Inc.

For your own safety, please read through this instruction manual that we have prepared for you thoroughly, and take precautions when using the product. We hope that you will become accustomed to the product quickly.

Product Specifications

Electrical Power (MANUAL SELECT)

Domestic 120 VAC @ 60 Hz, 5 amps

International 240 VAC @ 50 Hz, 2.5 amps

Temperature

32° to 100° Fahrenheit

Humidity

Must not exceed 95% relative humidity

Assembled "AIR GAME DC COMICS" Dimensions

Width – 48,5"

Depth – 88"

Height – 37"

Weight Assembled ~360 lbs.

Before Assembling

WARNING

THIS TABLE WEIGHS 360 POUNDS

1. Please make sure you have at least 4 strong adults to assist with assembly and installation*.

Note: Bandai Namco Amusement America accepts no responsibility for any injury that may result from the assembly, installation or moving of this product.

2. Inspect to make sure all the parts are included and not damaged.
3. Prior to assembly, you must ensure there is sufficient space for placing or shifting this product.

Tools required for Assembling*

- DC Comics Air Hockey Manual
- Scissors
- Hex Allen Key - 4mm (located inside the bag manual)

Note: Prepare the above specified tools. Be careful not to damage the product while using these tools

Product Parts

1. For Legs

- 4 Dc Comics Plastic Legs

- 4 Adjustable Leg Levelers

- 24 Roundhead screws M6 x 35mm

- 24 Split Lock washers M6

- 24 Flat washers M6

2. For Protection Acrylic

- 2 metal acrylic center holder

- 4 side protection acrylic

- 1 center acrylic

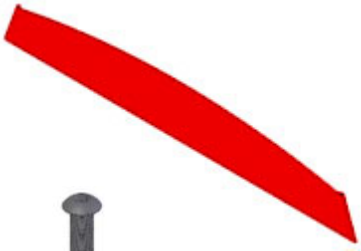

- 16 Roundhead screws M6 x 35mm

3. For Player

- 2 doors keys

- 1 AC Power cord

- 2 pucks

- 2 mallets

Assembly Procedures

1. Use scissors or a knife to cut* through the packing tape.

Note: Do not cut too deep or you will damage the unit.

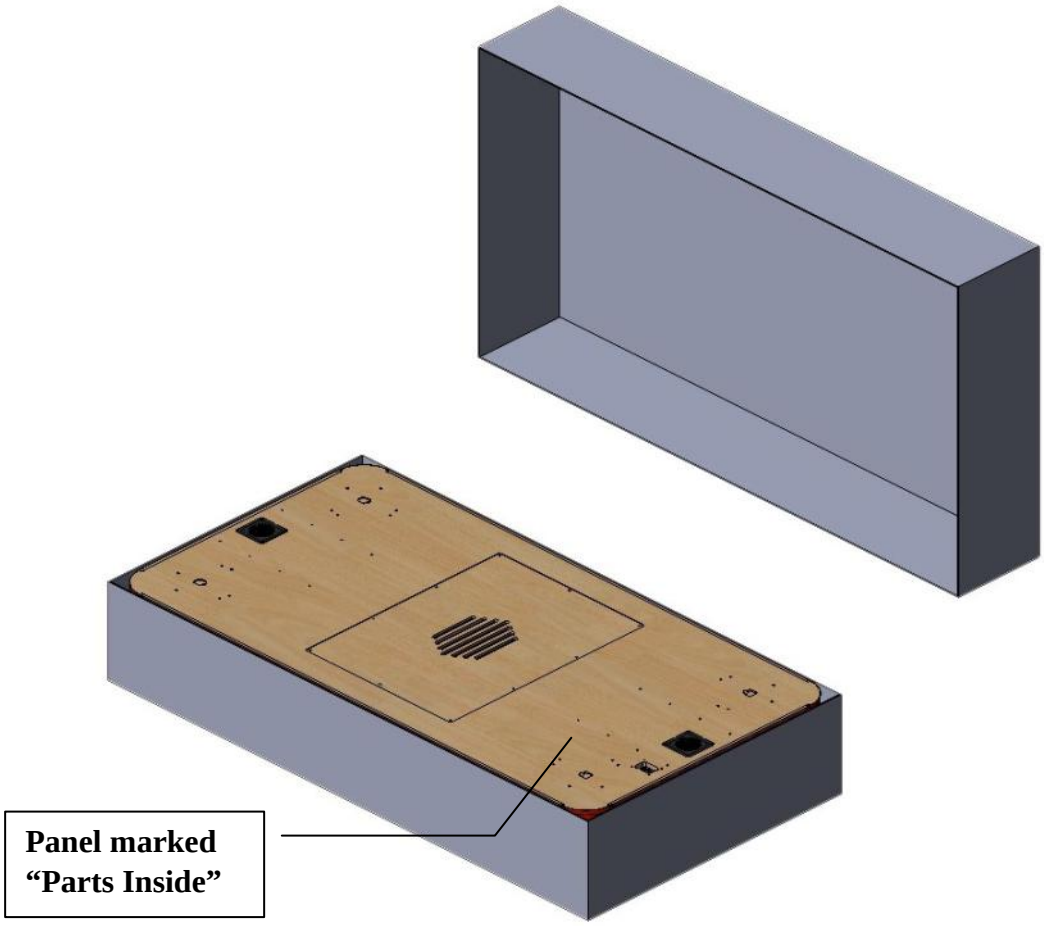

2. Open the carton, make sure the wooden side of the Air Hockey table is facing up.

3. Use Hex Allen Key - 4mm to unscrew the 10 screws on the panel with the sticker “Parts Inside’’ on it. Once the panel is opened, please take out the parts* indicated on page 5 and 6.

Note: Do not remove Air Blower

4. Take out the 4 Air Hockey table plastic legs and screw the adjustable leg levelers into the base of the legs.

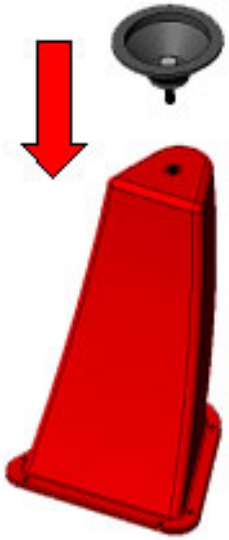

5. Place the legs on the bottom surface of the table. Ensure alignment and then attach with roundhead screws M6 x 35mm and split lock washer M6 and flat washer M6

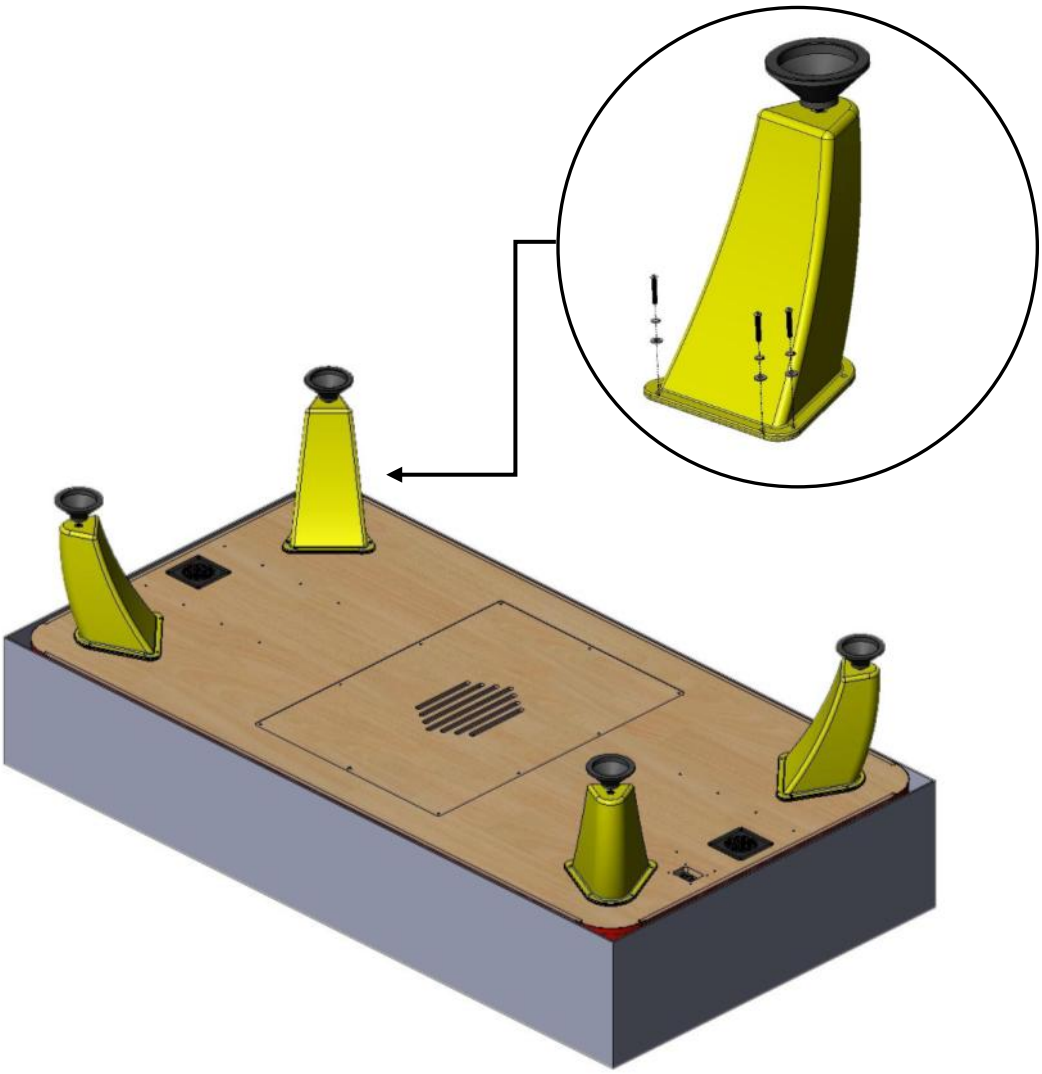

6. Plug in the AC Power Cord

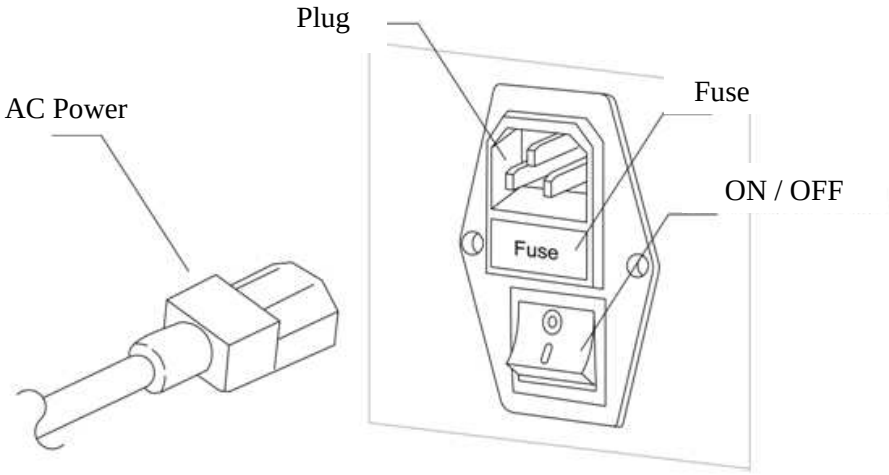

7. Ensure all legs are tightly attached then flip the table 90 degrees keeping the cardboard top on to prevent scratching. This action requires 4 people. Please make sure you have at least 4 strong adults to assist with assembly and installation. Flip it another 90 degrees to place the legs on the ground.

Using 2 steel locker central protection, assemble the central protection acrylic. Ensure alignment and then attach with 4 roundhead screws M6 x 35mm.

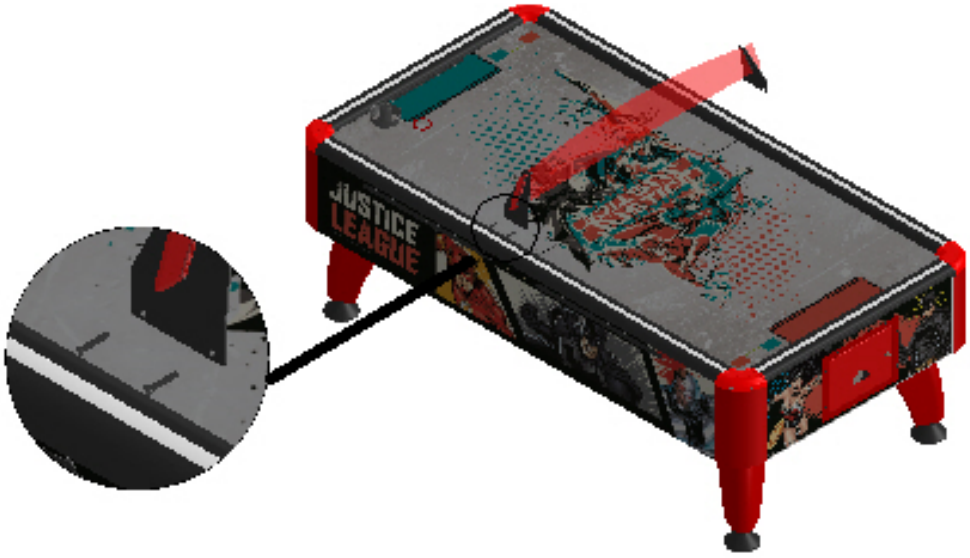

8. Assemble the side protection acrylic. Ensure alignment and then attach with 3 roundhead screws 6 x 35mm, each peace.

Safety Instructions for Use and Play

Risk of Electric Shock

- Hazardous voltage, which can cause electrical shock, exists inside the equipment. Only qualified personnel should work inside the equipment.

Playing Warnings

- Do not hit the puck with the mallet when the puck is not level and flat.
- Spectators should not stand by the side of the table. This may cause injury.
- Hold the mallet by the handle and not the base or the puck may hit fingers.
- This game features flashing lights, which may not be suitable for photosensitive epilepsy.

Hardware and Software Configuration

First, ensure the power is off. Open the door with a key. Hold the panel's handle and pull it out until half of the power panel is exposed.

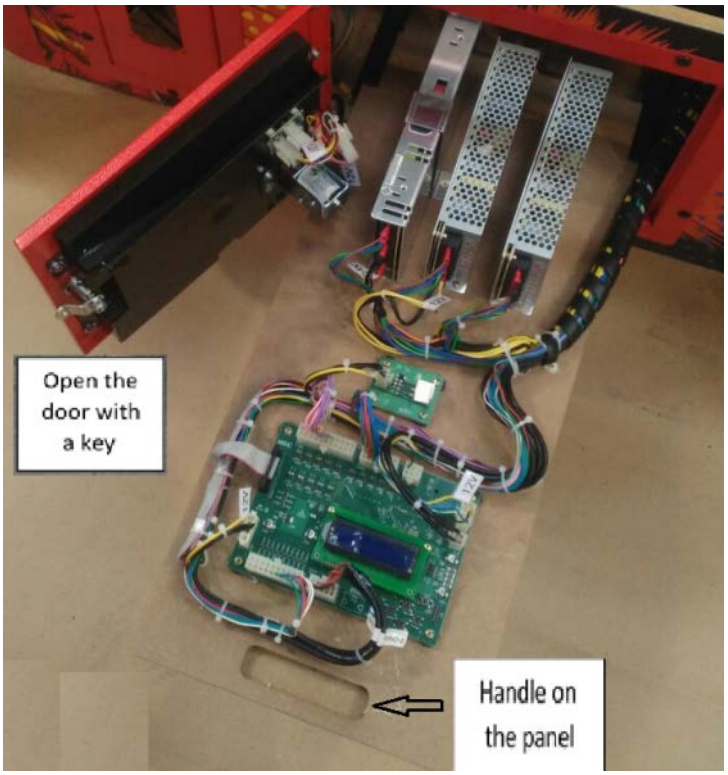

Hardware Descriptions

Note: Do not touch open terminals or exposed wires while the game is on. Risk of electric shock.

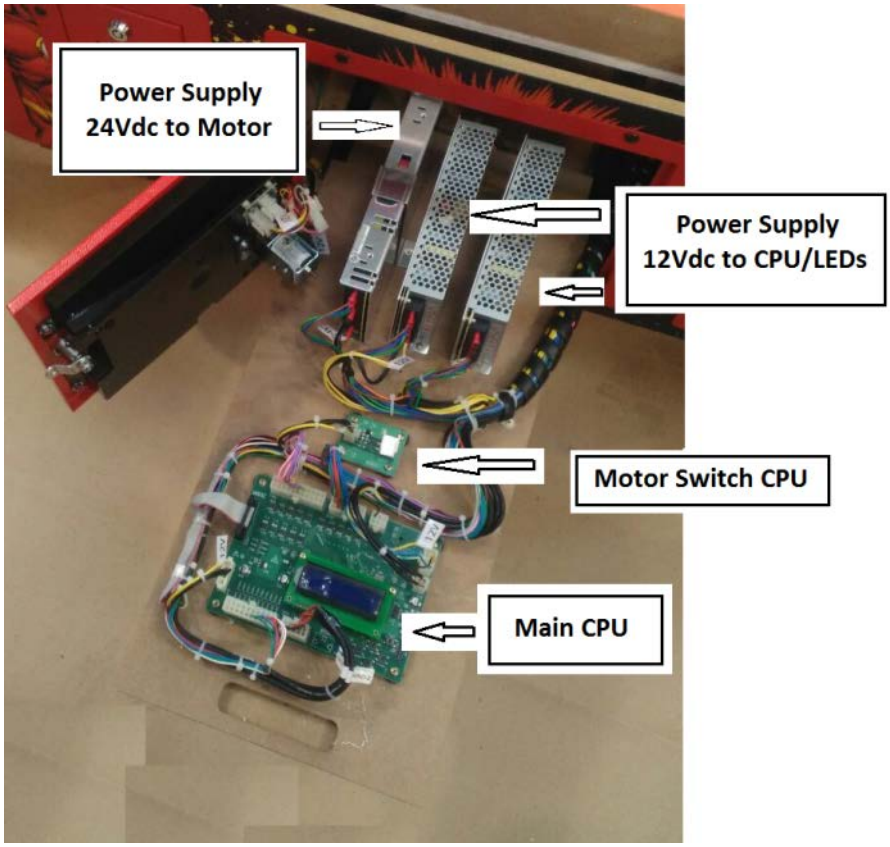

Hardware Specifications

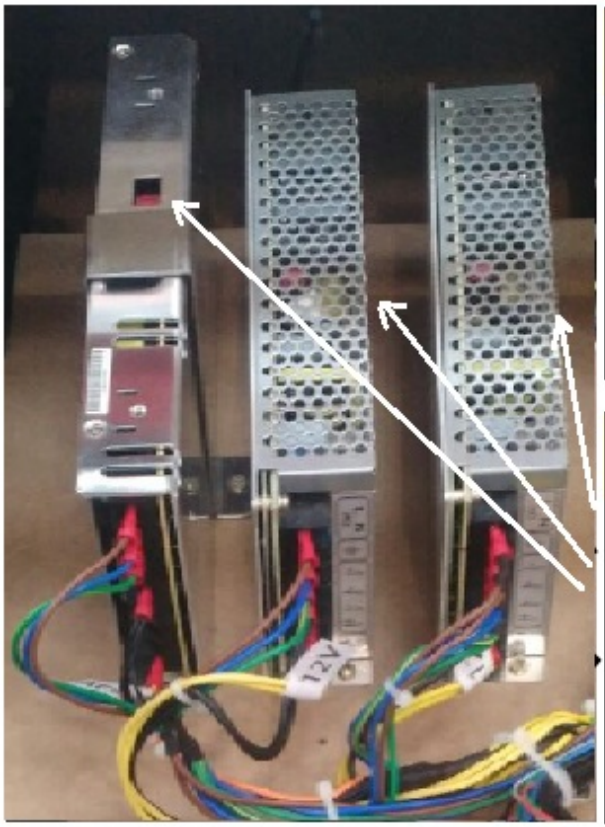

Risk of Electric Shock

Avoid electric shock. Do not touch open terminals or exposed wires. Please turn off the game to perform repairs.

Hazardous voltage, which can cause electrical shock, exists inside the equipment. Only qualified personnel should work inside the equipment.

Warning

Machine is shipped set to 120 Volts, if operating this machine in an area that uses 220 Volts, both power supplies must be changed or severe damage will occur.

To change the voltage, swipe the red switch inside the both power supplies.

Power Supply

Provides power to all internal components, such as the motherboard, coin mechanism, motor. etc. The +12 VDC and +24VDC are separated to ensure no interference to components when one has an insufficient supply or an unstable supply of power.

Note: +24 VDC is on the left +12 VDC is on the right

Motor PCB

Motor PCB switches the blower motor on and off. When the green LED is on, the motor is on! Main PCB control the motor PCB.

Main PCB

Controls the operation of all internal components. Malfunctions or errors with any of the components can be diagnosed by looking at the DISPLAY indicators on the main PCB.

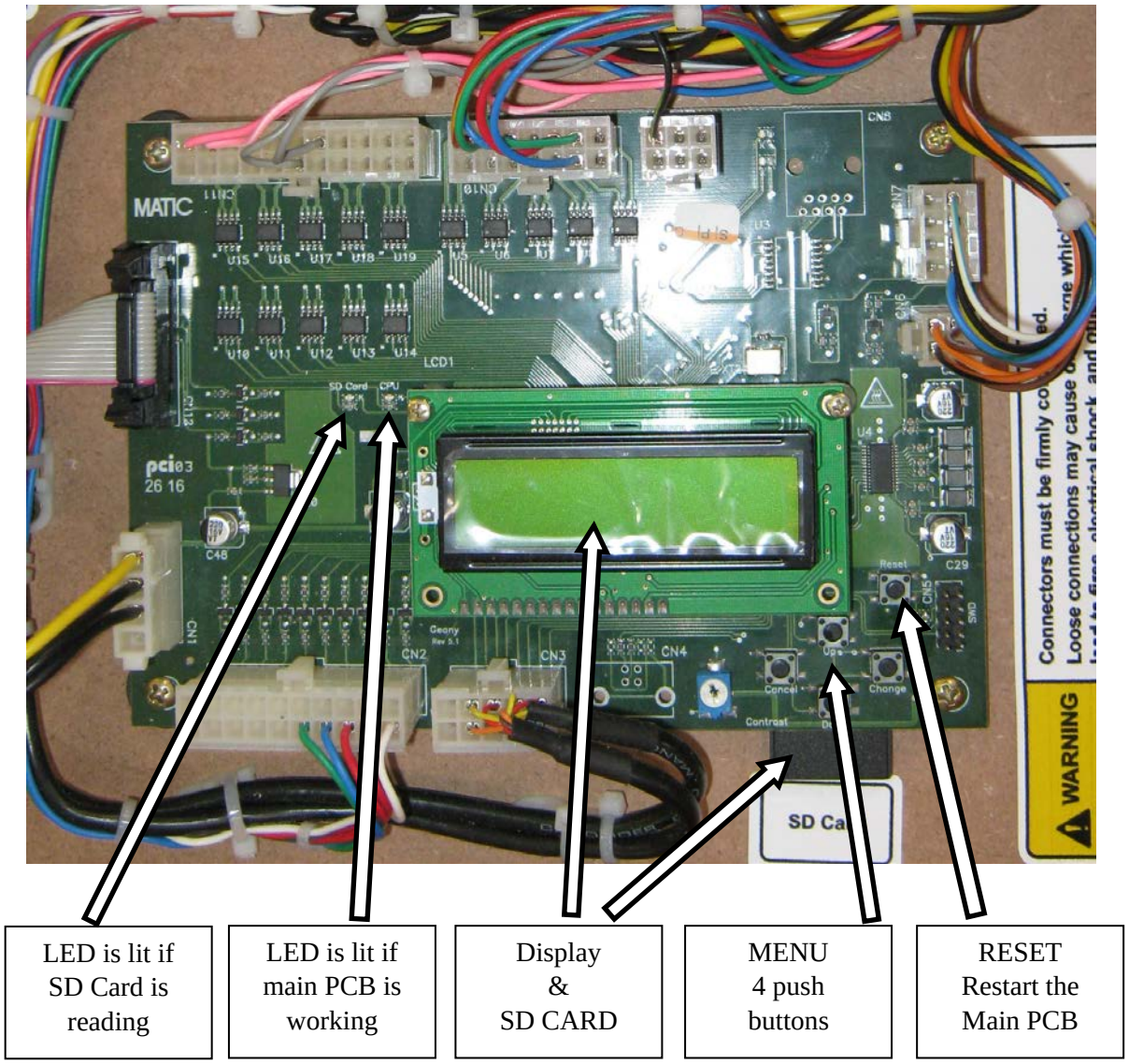

Software Specifications

- Short Menu:

i. Press up to set VOLUME IN GAME, adjust the volume using up and down then press change for complete.

ii. Press down to set VOLUME DEMO, adjust the volume using up and down then press change for complete.

- Complete Menu:

Press change to enter menu, up and down to choose options, cancel to return.

Menu Diagram:

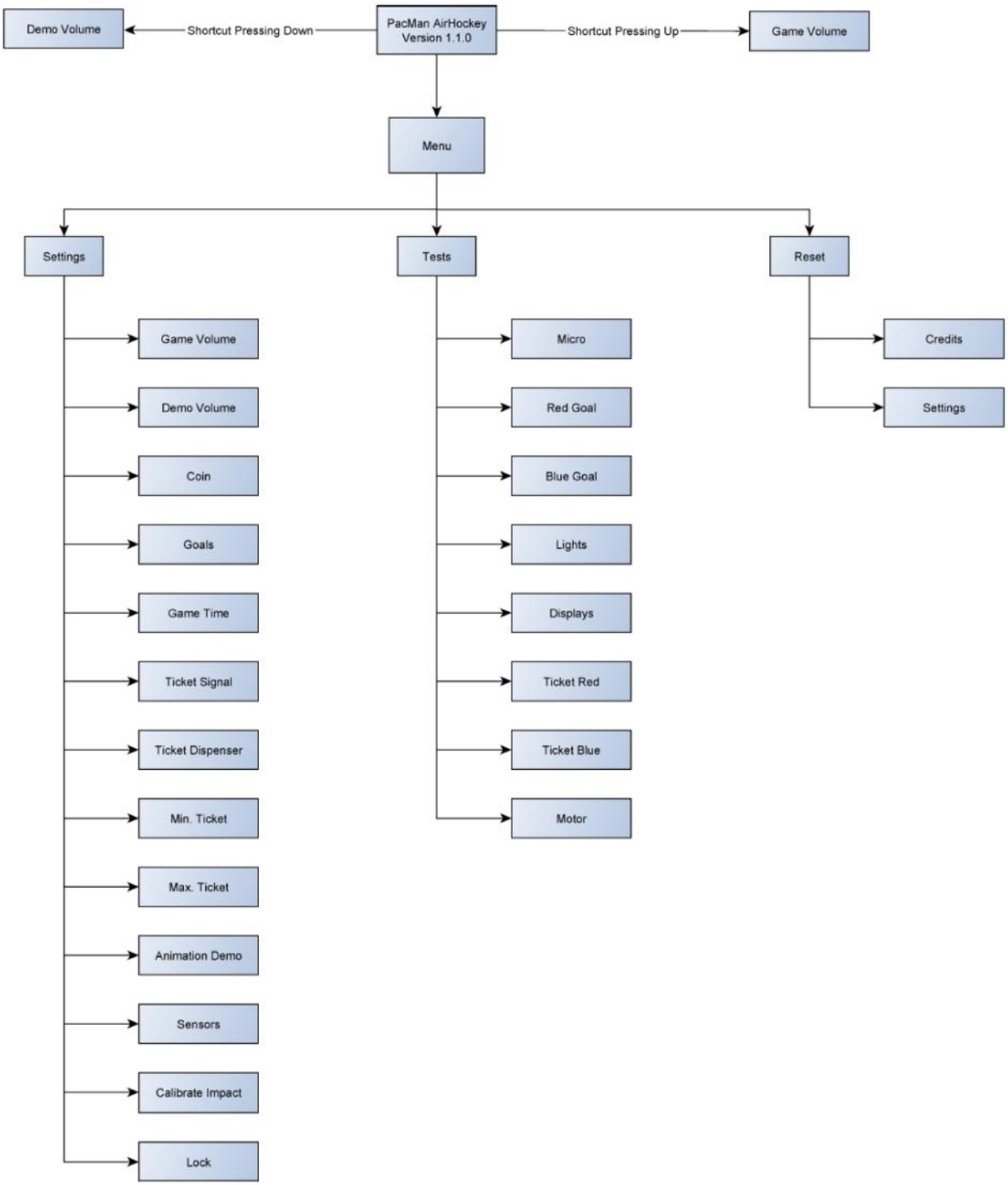

Parts

Cabinet parts

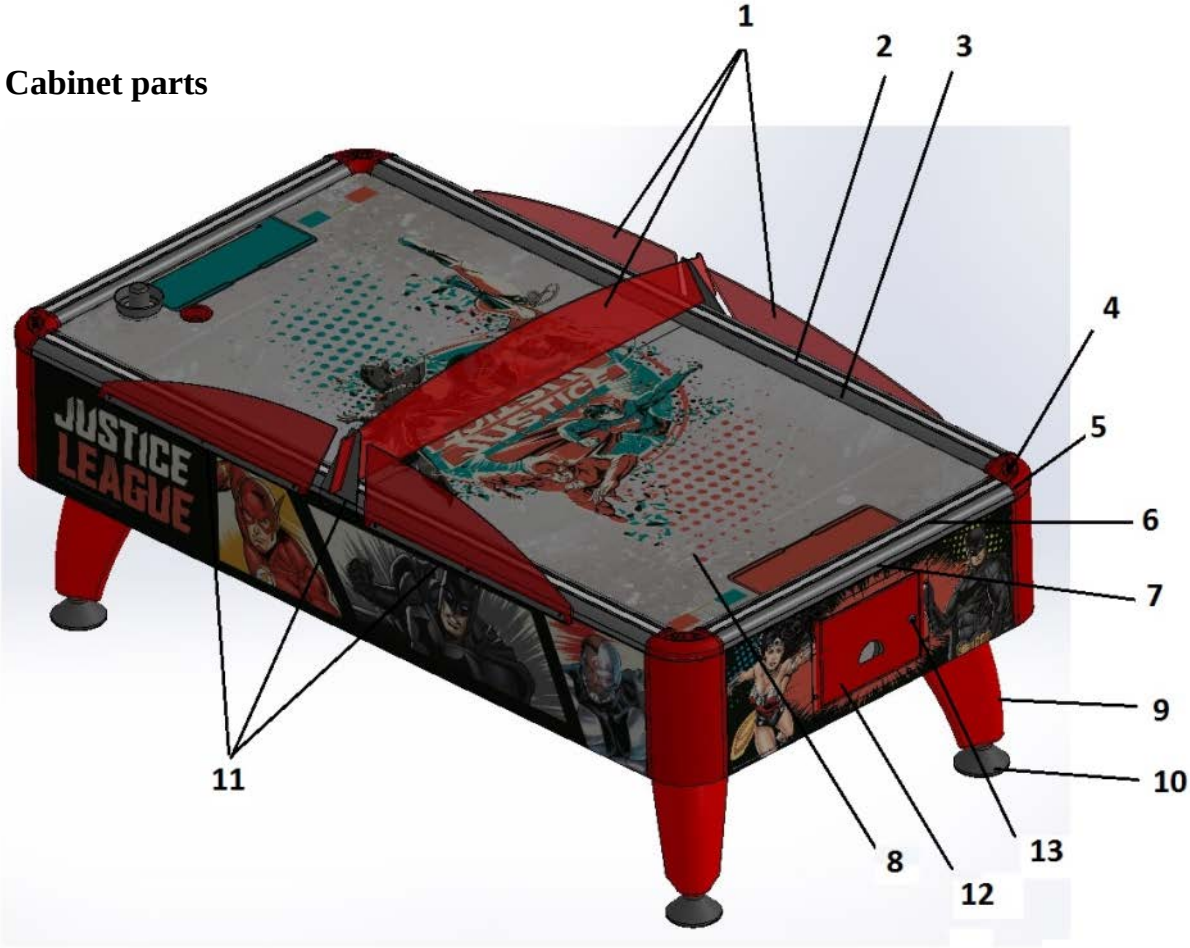

Ref	Part Description	Part#
1	Protection Acrylic Set	AH90-68-000-435-00
	Protection Acrylic Center	AH90-21-001-355-00
	Protection Acrylic Left	AH90-21-000-354-00
	Protection Acrylic Right	AH90-21-001-354-00
2	Side Clear Rubber Perimeter Rail Trim	AH90-19102-00
3	Side Aluminum Rail	AH10-33-002-700-00
4	Red Plastic Corner	AH90-55-000-142-00
5	Red Corner Finishing	AH90-55-000-146-00
6	End Clear Rubber Perimeter Rail Trim	AH90-19103-00
7	End Aluminum Rail	AH90-33-002-699-00
8	Acrylic Play Field 10MM “Dc Comics”	AH40-23-001-356-00
9	Leg “Dc Comics”	AH90-57-000-064-00
10	Leg Leveler	AH20-31-000-095-00
11	Protection Bracket Set	AH05-68-000-259-00
	Protection Bracket Left/Right	AH05-68-000-259-99
	Protection Bracket Center	AH05-68-000-259-98
12	Coin Door Puck Dispenser	AH05-68-000-252-00
13	Lock	AH26-64-700-006-00

Cash Box and Tickets Parts (Arcade Version Only)

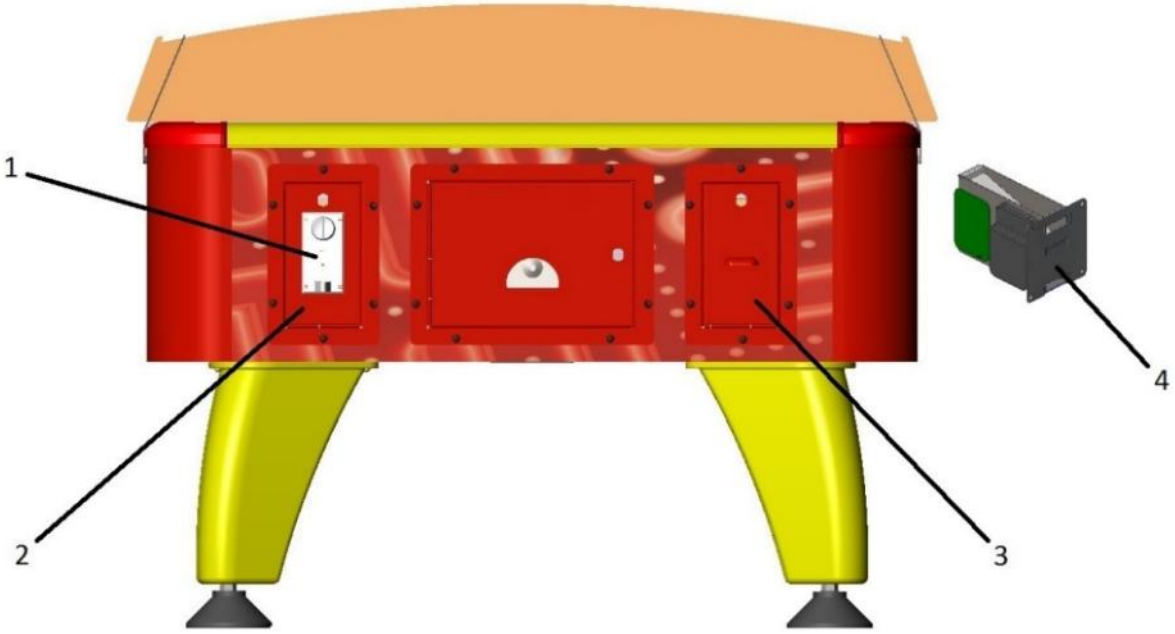

Ref	Part Description	Part#
1	Coin Acceptor	AH83-42-400-042-00
2	Coin Door Assembly	AH83-68-000-253-00
3	Ticket Door Assembly	AH83-68-000-254-00
4	TL-002IV Ticket Dispenser	AH82-42-400-106-00

Electronics

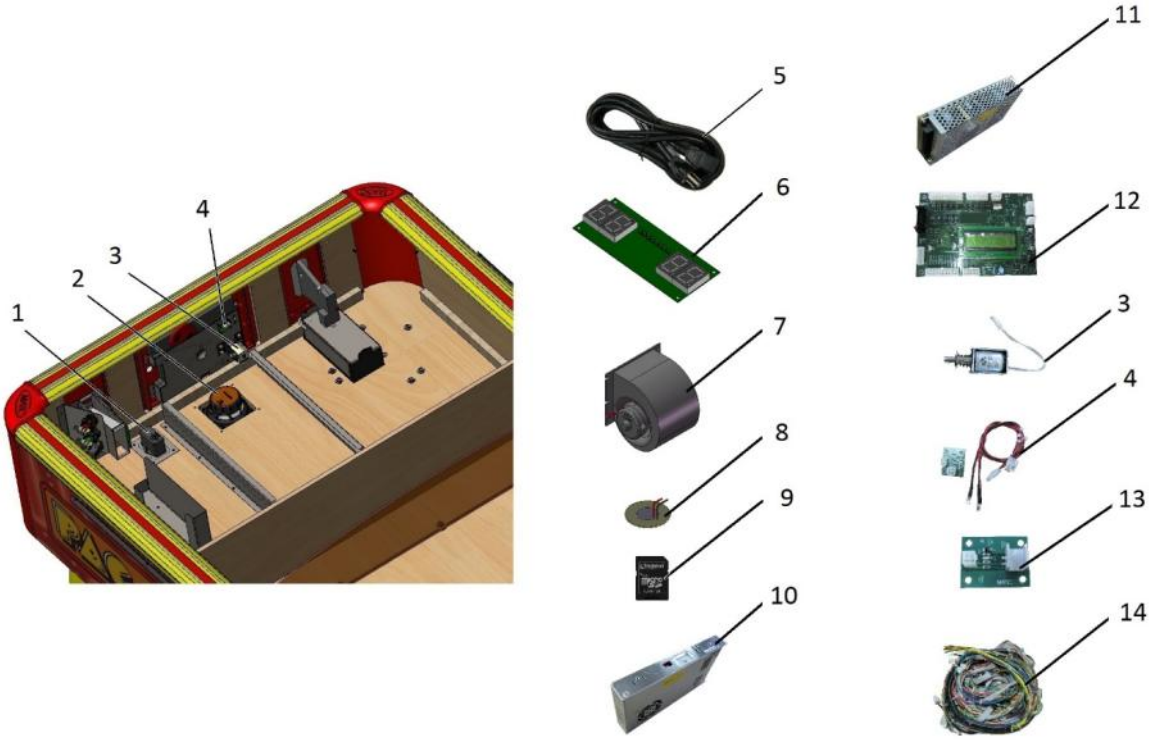

Ref	Part Description	Part#
1	Line Filter 125/250 VCA 6A	AH78-42-500-007-00
2	Speaker 4” 40W 4 OHMS	AH54-40-000-032-00
3	Solenoid Matic 12V HST-100.1 12VCC-100%	AH36-42-400-107-00
4	Optical Goal Sensor	AH79-68-000-255-00
5	Power Cord 6 feet	AH51-40-200-104-06
6	Display PCB “Air Rev. 1”	AH15-41-700-062-00
7	Blower	AH58-40-000-009-00
8	Rail Sensor Chip “Piezoelectric” 27MM 30V	AH75-40-600-003-00
9	SD Card with Software “DC Comics Air Hockey”	AH15-43-000-036-01
10	Power Supply 24V 150W “Meanwell LRS-350-24”	VG88-16287-00
11	Power Supply 12V 150W “Meanwell RS-150-12”	VG88-14591-00
12	Main PCB “Geany Rev. 5.1”	AH15-43-000-035-00
13	Motor PCB “Motor Rev.1”	AH15-41-700-064-00
14	Complete Hardness “Pac Man Air Hockey (EXP)”	AH50-40-100-110-00

Decal Prints

Ref	Part Description	Part#
1	Decal Side Superman/Wonder Woman	AH40-68-000-516-01
	Decal Side Batman/ Flash	AH40-70-000-516-02
	Decal End Superman/ Flash	AH40-70-000-515-01
	Decal End Batman/ Wonder Woman	AH40-70-000-515-02
2	Security Decal Set	AH40-68-000-261-00

Consumable Parts

Ref	Part Description	Part#
1	Puck (Red)	AH95-55-000-016-00
2	Mallet	AH90-68-000-039-00

© BANDAI NAMCO Amusement America Inc.

First Edition Published in January 2018

BANDAI NAMCO AMUSEMENT AMERICA INC.

712 N. Central Avenue Suite B

Wood Dale, IL 60191

847.264.5610

FAX: 847.264.5611

Technical Assistance (USA)

Parts: 847.264.5612 Tech Service: 847.264.5614

Fax: 847.264.5613

Part No. AH45-19107-00

Specifications of the machine and contents of this operation manual are subject to change without prior notice due to product improvements.