Setup and Operations Manual

GALAGA ASSAULT ™ & © BANDAI NAMCO ENTERTAINMENT Inc.

TABLE OF CONTENTS:

SAFETY…….2

PRODUCT SPECIFICATIONS…….4

SETUP…….5

OPERATOR TIPS AND ADVANCED FEATURES…….8

ADJUSTMENTS, AUDITS AND DIAGNOSTICS…….11

MAINTENANCE…….14

TROUBLESHOOTING…….17

ELECTRICAL AND MECHANICAL ILLUSTRATIONS…….20

PARTS AND SERVICE CONTACT INFORMATION…….32

Safety

Operation

Before operating game, read this manual. Failure to properly install and operate this game could result in malfunction or accident. Operate the game in accordance with the manual.

Transporting

The cabinet is very heavy. Because the monitor is high, the cabinet is also very top-heavy. Use appropriate care when moving or transporting cabinet. It contains fragile glass and electronic components. Avoid rough handling.

Handling Components

Many components are extremely sensitive to handling, environmental and Electrostatic Discharge (ESD) events—especially the computer. Do not handle it roughly. Before servicing, call your distributor and inquire about the PC warranty. Use proper ESD procedures when servicing. Protect components from harmful environmental conditions, such as extreme temperatures, excessive moisture or other damaging effects.

Disconnect power

Always turn the power off and unplug the unit before servicing or making adjustments unless otherwise instructed. Installing or repairing components while power is on can damage the components and void the warranty.

Grounding

Avoid electrical shock. Do not plug in AC power until you have inspected and properly grounded the unit. Only plug into a grounded, three-wire outlet. Do not use a “cheater” plug or cut off the ground pin on the line cord.

Electrical Shocks

There is no isolation transformer in the cabinet. Disconnect AC power before servicing. However, be aware that lethal voltages can remain in the electronic components even when AC power is disconnected. Use extreme caution when servicing. Verify that there is a working ground connection. If the unit sustains water damage, cease using it immediately and unplug AC power.

Monitor

The monitor contains no user serviceable parts. Do not attempt to service the monitor.

Power Selector

Before installing game, ensure the voltage on the PC and power supply is set properly. There is a 115/230 VAC selector switch that must be set for the correct voltage for your site. Verify the fluorescent lamp rating. The rating must match the line voltage at the installation site.

Power Cord

If the power cord is damaged or lost, replace it with an identical cord as supplied by the manufacturer or an authorized service agent.

Surge Supressor

It is recommended that you plug your game’s power cord into a surge suppressor to help protect from power surges that may damage sensitive electronic components.

WATER AND OTHER LIQUID SOURCE

Do not install game near sprinkler or other water jet sources. Do not use water jet to clean game. Keep minimum clearance behind game and wall for proper ventilation but also prevent access of liquid from spills and sprays from entering ventilation holes.

CONNECTORS

When servicing machine, ensure all connectors mate properly. If connectors do not slip in easily, do not force them. Connectors are often keyed and only connect one way. Check for correct orientation.

COMPUTER

The computer contains sensitive components, including a hard drive. Do not handle it roughly. Call your distributor before servicing its internal components. Ask about warranty information as it relates to the PC.
Do not turn the PC power switch on or off. It should remain permanently in the ON position.
Cycle AC power on or off with the cabinet power switch.
A dongle has been inserted into one of the USB ports. This is required for game play.
Do not remove the dongle except for troubleshooting purposes.

TEMPERED GLASS WARNING

When handling the LCD display glass cover take special care and set the glass down softly on a flat surface free of debris. The edge of the glass is sensitive to hard impact. Shattered glass can travel long distances and cause bodily injury. Use proper procedures when handling broken materials.

HAZARD TO EPILEPTICS

A small portion of the population has an epileptic condition that may cause seizures. Affected persons experience seizures while watching some television pictures or playing certain video games. People who have not had seizures may still have an undetected epileptic condition. If anyone in your family has experienced epilepsy symptoms (seizures or loss of awareness), consult your physical before using video games. While children play video games, a parent should observe. Be alert to the following symptoms: dizziness, altered vision, eye or muscle twitching, involuntary movements, loss of awareness, disorientation or convulsions. If you or your child experiences these symptoms, discontinue use immediately and consult your physician.

MANUAL

Keep this manual available and ready for use. Please check our website www.rawthrills.com for the latest information regarding this and other Raw Thrills products. If the game fails to function properly, turn off the machine and unplug the AC line cord. Contact your local distributor. Your warranty, when applicable, lasts 60 days from your purchase date. You may not reproduce this document or any of its contents without written authorization from Raw Thrills, Inc. or Play Mechanix™ Inc.

SPECIFICATIONS

For reasons such as performance, this product's specifications may change without notice. Federal patent, copyright and other intellectual property laws protect the content, devices and design of the game and its equipment.

Product Specifications

Electrical Power

United States, International and Japan
Inrush AC Current: 7 Amps
Operating AC Current @ 120VAC: 5 Amps
Operating AC Current @ 230VAC: 2.5 Amps
Voltage: 115/230 VAC 50/60Hz

Electrical Safety Notice:
For continued protection against the risk of fire, use only specified fuse values.

Dimensions

Height: 108 5/8” (2.76 meters)
Width: 33 1/4” (0.85 meters)
Depth: 42 3/4” (1.10 meters)

Temperature

50° F to 104° F
(10° C to 40° C)

Humidity

Must not exceed 95% relative humidity.

Setup

Unpack Materials

1. Place the shipping crate(s) on a flat, stable surface.
2. Cut the banding straps and remove the cardboard lid(s).
3. Lift off the large cardboard container(s) surrounding the cabinet assembly and remove any shipping cleats.
4. Remove the coin door key from the coin return slot.
5. Open the top coin door.
6. Locate the keys for the back door and the cash box door.
7. Open the cash box door and remove the cash box.
8. Check for shipping damage to the following:
   - Marquee and monitor
   - Cabinet decals
9. Check the AC line cord for visible signs of damage.
   Pay particular attention to the plug and line cord insulation.

Marquee Installation Instructions (Requires 2 Persons)

1. Carefully unpack the marquee.
2. Located the mounting hardware plastic bag attached to the marquee assembly.
3. Place 2 ladders on each side of the cabinet.
4. Bring the marquee to the top of the cabinet and into mounting location and feed the power harness connector into the access hole on the top of the cabinet.
5. Secure the marquee with the fasteners provided.
6. Make the electrical connection located inside the top back door of the cabinet assembly.

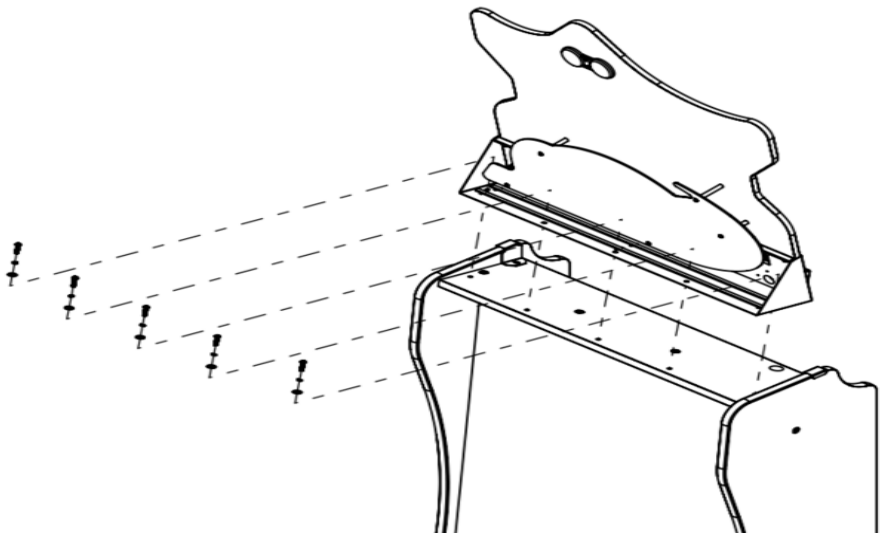

Check Electrical Settings

1. Verify the voltage in the nearest AC outlet.
2. Verify the AC outlet ground connection is present and working.
3. Open the lower back door of the cabinet assembly.
4. Route the line cord so that the plug is near the AC outlet.
5. Replace the lower back door of the cabinet assembly.

Startup Game

1. Plug in line cord to AC outlet.
2. Turn the power switch to ON.
3. Check that no component is excessively hot or emitting foul odors.
   If not, turn off AC power and disconnect line cord. Refer to the diagnostic section of this manual.

Diagnostics and Adjustments

The Service Button Panel has four buttons, three of which can navigate the menu system.

But it is easiest to navigate with the Start button and joystick.

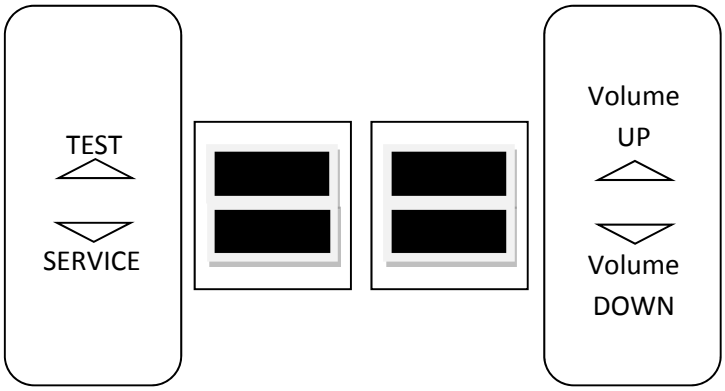

TEST button enters diagnostic system**. IMPORTANT NOTE:** You must hold down the TEST button for at least 2 seconds to Enter the Test Menu.

- Either Start/Fire button or TEST button selects the highlighted option
- VOL DOWN button moves down through menu or setting choices.
- VOL UP button moves up through menu or setting choices.
- Service Button adds a single credit for each press during attract mode and returns to previous Test Screen when on Test Mode.

  At the bottom of the test menu is a display of your game's critical settings. At the right of each test menu screen is a brief description of each menu item.

Basic Functional Test On Initial Power Up

See the Diagnostic Section for further information.

1. Enter the Switch Test menu and verify all switches function.
2. Enter the Monitor Test menu and verify that video is acceptable.
3. Enter the Sound Test menu and verify the audio works and is not distorted.
4. Enter the Coin Meter /Ticket Meter Test menu and verify the operation of the coin meter.
5. Enter the Cabinet Lamps Test menu and verify that all cabinet lights work correctly.
6. Enter the Watchdog Test menu, which reboots the game.
7. Upon a successful reboot, you are ready to make adjustments to pricing, volume and other functions found in the Adjustments, Audits and Diagnostics section.

Operator Tips and Advanced Features:

$$$ KEYS TO MAXIMIZING YOUR EARNINGS! $$$

- **IF YOU HAVE A CARD SWIPE LOCATION, SET YOUR GAME TO CARD SWIPES MODE**
    1. HOLD TEST BUTTON FOR 2 SECONDS TO ENTER TEST MENU
    2. USING THE JOYSTICK, SELECT "PRICING ADJUSTMENTS" IN THE MENU. PRESS FIRE BUTTON TO ENTER.
    3. USING THE JOYSTICK, SELECT "CURRENCY INPUT", PRESS FIRE BUTTON TO ENTER
    4. SELECT "SWIPES" FROM THE MENU
    5. SET "SWIPE VALUE" TO THE CURRENCY EQUIVALENT OF YOUR SWIPE OR PAYOUT WILL BE INCORRECT. THIS SETTING IS EXTREMELY IMPORTANT (EXAMPLE- IF THE CARD SWIPE IS WORTH $1.50 IN YOUR CARD SYSTEM, SET SWIPE VALUE TO $1.50 AS WELL)

- **IF YOU HAVE A COIN LOCATION, MAKE SURE YOUR PRICING & COIN VALUE ARE CORRECT**
    1. HOLD TEST BUTTON FOR 2 SECONDS TO ENTER TEST MENU
    2. USING THE JOYSTICK, SELECT "PRICING ADJUSTMENTS" IN THE MENU. PRESS FIRE BUTTON TO ENTER.
    3. USING THE JOYSTICK, SELECT "COINS TO PLAY" AND SET THE DESIRED AMOUNT OF COINS PER GAME OF GALAGA ASSAULT.
    4. AFTER SETTING THE COINS PER PLAY, SET "COIN VALUE" TO THE CURRENCY VALUE OF YOUR COIN OR PAYOUT WILL BE INCORRECT. THIS SETTING IS EXTREMELY IMPORTANT (EXAMPLE- IF THE COIN IS WORTH 1.00, SET COIN VALUE TO $1.00 AS WELL.
    5. OPTIONAL PRICING SETTING- YOU CAN CHOOSE A DISCOUNTED PRICE FOR ADD SHIPS TO ENCOURAGE MORE ADD SHIP PURCHASES. (THIS SETTING NOT AVAILABLE IN SWIPE MODE)

- **IF YOUR LOCATION USES TICKETS THAT ARE WORTH 2 POINTS EACH, MAKE SURE YOU ACTIVATE THE 2 POINT SETTING**-
    1. HOLD TEST BUTTON FOR 2 SECONDS TO ENTER TEST MENU
    2. SELECT "PAYOUT ADJUSTMENTS" FROM THE MENU
    3. SELECT "TWO POINT TICKETS" AND TURN ON.
    4. IMPORTANT NOTE- ONLY USE THIS SETTING IF YOUR TICKETS ARE WORTH 2 POINTS PER TICKET OR YOUR PAYOUT WILL BE INCORRECT.

- **MORE TICKETS = MORE FUN AND MORE EARNINGS**
    1. WE RECOMMEND USING THE DEFAULT PAYOUT SETTING OF 40% TO MAXIMIZE EARNING POTENTIAL AND FUN FACTOR FOR THE PLAYERS.
    2. TARGETED PAYOUT PERCENTAGE CAN BE RAISED OR LOWERED BY ENTERING THE TEST MENU AND SELECTING "PAYOUT ADJUSTMENTS" AND THEN "PAYOUT PERCENT".
    3. IMPORTANT NOTE- GALAGA ASSAULT WILL DYNAMICALLY ADJUST TO YOUR DESIRED PAYOUT SETTING

ADD SHIPS-

- Galaga Assault defaults to having "ADD SHIPS" activated for both video redemption as well as arcade amusement mode. This unique mode allows the customer to buy extra Galaga fighter ships at the beginning of play to give them extra firepower. This mode increases the fun factor for the players and improves earnings for the operator. We strongly recommend using this mode during operation. However, it can be disabled in the test menu if the operator chooses.

  Note - Having Add Ships mode activated makes certain settings options unavailable

ARCADE AMUSEMENT MODE-

- Galaga Assault defaults to video redemption mode which consists of two stages and awards tickets to the customer based upon performance and skill. However, this game comes equipped with a completely alternate arcade amusement only mode that does not award tickets and contains separate unique gameplay inspired by the classic Galaga arcade game. This mode is ideal for non-ticket redemption locations. The arcade setting consists of 70 waves of play that include standard waves, challenging stages, and battles with the mothership boss. If you defeat the boss at Wave 70, you win the game. As with redemption mode, players will also be able to compete for high scores on the leaderboards.

  Steps to activate Arcade Amusement Mode:

  1) Hold Test button for 2 seconds to enter test menu
  2) Select the "Payout Adjustments" menu with the joystick and press start
  3) Select "Arcade Amusement Mode" and set to "ON"
  4) Choose the amount of "Extra Lives" you would like your customer to receive per credit. (The game defaults to 3 ships per credit.)

  Note 1 - Activating this mode will disable ticket mode. All ticket customization options will be unavailable while Arcade Amusement mode is activated.

  Note 2 - Add ships will default to "ON" during Arcade Amusement Mode. Operator can choose to disable this mode if they choose.

QR CODES-

- Galaga Assault will display on the screen a unique square black and white QR code at the conclusion of every game. This QR code can be scanned by a customer's cell phone or wireless device (using a QR code app) to display their high score and location information to social media networks like Facebook and Twitter.
- Operators can also enter their location name and the city name in the "advanced settings" menu so this data will appear on the social media network. (Example of venue and location name: "Matt's Pizza Arcade- Des Plaines, IL USA"). Adding the location data is free advertising

for the operator and fun for the customer to brag about their score on their social media accounts.

Note - QR Codes will default to “ON” in the test menu. However, the location data will need to be entered manually by the operator. Turning the QR Codes to “OFF” will cause the codes to not display on screen after games.

(Example of a Raw Thrills QR Code)

Max Jackpot-

- Galaga Assault defaults to a rotational jackpot. The jackpot number on the mothership changes and the customer wins the amount shown at the moment the mothership is destroyed. Operators can adjust the max jackpot in the test menu settings by accessing the “Payout Adjustments” menu. Galaga Assault will default to a max jackpot of 500. It can be raised as high as 1000.

  Note - It is not recommended to raise the max jackpot to extremely high levels if you plan on operating the game at a low target payout percent. Doing so will limit the amount of jackpots awarded and decrease the fun factor for the customer.

Adjustments, Audits and Diagnostics

Main Menu

MAIN MENU

DIAGNOSTICS
PRICING ADJUSTMENTS
PAYOUT ADJUSTMENTS
AUDITS
RESETS
VOLUME
ADVANCED SETTING
EXIT

Main Menu

Diagnostics Menu

This menu allows all game functions to be verified or diagnosed.

DIAGNOSTICS MENU

CRC CHECK
SWITCH TEST
MONITOR TEST
LIGHT TEST
SOUND TEST
COIN / TICKET METER TEST
TICKET DISPENSER TEST
WATCHDOG TEST

EXIT

You can improve collections by periodically verifying proper game function and operation.

Main Menu

Pricing Adjustment Menu

This allows customization of coin values, currency denominations, bill pulse and swipe value.

PRICING ADJUSTMENT MENU

CURRENCY INPUT SWIPES/COINS
FREE PLAY
CURRENCY TYPE
SWIPE VALUE
SWIPE TO PLAY
COINS PER ADD SHIP

Main Menu

Payout Adjustment Menu

This menu allows for customization of target payout percentage and ticket value. Changes will result in audits being reset. Please note that some customization features are unavailable when add ships is turned on. Arcade Amusement (non-ticket) mode can also be activated in this menu.

PAYOUT ADJUSTMENT SETTINGS

PAYOUT PERCENTAGE
TICKET VALUE
TWO POINT TICKET
JACKPOT ROTATING
TWO POINT TICKETS
DOUBLE PLAY
ADD SHIPS
ARCADE AMUSEMENT MODE
EXTRA LIVES

EXIT

Main Menu

Audits Menu

Audit screens help assess game performance, find intermittent problems, decide whether to adjust game difficulty and free game award and help maximize game earnings.

```
AUDITS

SYSTEM AUDITS
COIN AUDITS
PAYOUT AUDITS
GAME AUDITS

EXIT
```

Main Menu

Resets Menu

```
RESETS MENU

CLEAR COINS
CLEAR TICKETS
RESET AUDITS
RESET ADJUSTMENTS
FACTORY RESTORE
CRC CHECK

EXIT
```

Main Menu

Advanced Menu

Advanced menu contains options to reset high scores, customize your QR Code (Facebook/Twitter) Venue and Location Names, adjust attract mode frequency, as well as other miscellaneous options.

```
ADVANCED MENU

COPY AUDITS TO USB
ATTRACT MUSIC MODE
TICKET TERMINOLOGY
LEADERBOARD SETTINGS
TRADE SHOW MODE
QR CODES

EXIT
```

Maintenance

Hard Drive Recovery

Symptoms requiring hard drive recovery include

- File Test reports bad or missing files.
- Game fails to finish loading during startup.
- After resetting the AC power, an error is reported.
- Erratic Game or Attract Mode.
- The following screen:

WARNING!

CRC File Missing! Reinstall Software!

File Damaged! Reinstall Software!

File Missing! Reinstall Software!

The only way to repair corrupt files is to reinstall the software as described below:

COMPUTER

The computer contains sensitive components. Do not handle roughly. Call your distributor before servicing its internal components. Ask about warranty information as it relates to the PC.

Do ***not*** use the PC on/off switch. Turn AC power on or off with the cabinet power switch.

(NO DVD Restoration. USB Thumb Drive is used on the Dell Mini PC)

1. With game and PC on, verify that the RIO board has power. If not, see Troubleshooting.
2. Open the lower back door.
3. Insert the recovery USB thumb drive (included in your game) into the open blue USB port on the PC.
4. Turn cabinet power switch to OFF. Wait 30 seconds.
5. Turn cabinet power switch to ON.
6. Select the Galaga Assault restore version from the menu and follow on screen instructions
7. If recovery does not begin, check to ensure USB Drive is inserted correctly and is not damaged.
8. Initial software loading may take several minutes. Check progress periodically.
   Do not interrupt power or reset the game during recovery.
9. When software has been loaded, a message indicates that restore is complete. When instructed to remove USB Drive, remove the drive from the PC.
10. Turn cabinet power switch off.

11. After 30 seconds, turn cabinet power switch on.
12. Game will reboot and enter the Atrract Mode.
13. Start a test game to make sure that game is operating normally.

BIOS Settings/Power Management

NOTICE

The PC ships with correct BIOS settings. Making changes to the BIOS different from the description below may adversely affect game functions.

This BIOS setting lets the PC automatically power up. With the setting enabled, the PC reboots when it detects AC power. This eliminates the need to manually turn the PC back on after power disruption.

Do ***not*** use the PC on/off switch. Turn AC power on or off with the cabinet power switch. To access the BIOS Settings, you must insert a keyboard and hold the F12 key while the PC is booting up. From the Menu, Select "BIOS Setup"

1. Turn cabinet power switch off.
2. Open rear of cabinet.
3. Connect a USB keyboard to the PC.
4. While holding the F12 key on the keyboard down, turn cabinet power switch on.
5. When the BIOS menu screen appears, make the following adjustments.

Main

-No change

Advanced

-Intel SpeedStep = Enabled

-Virtualization= Enabled

-Integrated NIC = Enabled

-SATA Operation = AHCI

-Adapter Warnings = Enabled

Misc Device

-No change

Power Options

-Wake UP by Integrated LAN = Disabled

-AC Recover = Power ON

-Auto Power ON = Disabled

Security

-No change.

Boot

-Boot List Option = Legacy

-File Brower Add Boot Option

-File Brower Delete Boot Option

-Secure Boot = Disabled

-Load Legacy Option = Enabled

-1st Boot Priority = USB Storage Device

Exit

-No change

6. Follow instructions on screen to save and exit.
7. PC will reset and load the game.

Troubleshooting

Warning: Review safety chapter before making any adjustments to game.

Problem	Possible Cause	Solution
Game will not power up.	Game not plugged in	Plug game into AC outlet.
	Game not turned on	Turn on main power switch.
	Game fuse is blown.	Check and replace fuse.
	No power to receptacle	Test AC outlet and plug game into powered outlet.
	PC not turned on.	Turn PC power switch on. Ensure IEC cable tightly plugged in. Trace cable back to source to ensure continuity.
	PC BIOS set incorrectly.	See BIOS Settings chapter.
Scrambled or intermittent display	Loose DVI cable connection	Check DVI cable connection on PC and LCD display.
Buttons do not work	Faulty micro switch	Replace the micro switch on the button and re-test. Verify that the wires are connected to the correct spades on the micro switch
	Faulty wiring	Disconnect the cabinet from AC power. Verify that all wires are firmly connected to each button and the PCB. Verify that no wires are frayed or improperly shorting to ground. Verify that wires are connected to the correct spades on the micro switches.
	Faulty PCB	Ensure all connections to PCB are secure. Replace PCB if faulty.
Neither buttons nor audio work	PCB connected to faulty USB port (boot message may indicate not detected)	To test a USB port, turn off the game, disconnect the device from the port, and then connect the game dongle to the port. Reboot the game. A No Dongle message indicates the port is bad. If the game starts, the port is working. After the test, reconnect all devices to the correct USB ports and reboot.
No sound or bad sound	Bad connection	Check connection to speakers.
	Volume set too low	Use VOL UP button on Test panel to raise volume
	Faulty wiring	Verify all wires are firmly connected to the speakers, PCB, and green

		computer audio port. Verify that each wire is connected to the correct port and no wires are frayed or improperly shorting to ground.
	Blown speakers	Remove the grill and inspect each speaker for visible damage. Run the Sound Test from System Tests in the Operator Menu to verify each speaker is working.
	Reversed wires	A weak or low muffled sound is a sign of reversed speaker wires. Check for reversed wires on each speaker.
	Faulty PCB	To verify audio is working at the computer, connect stereo headphones to the green computer audio port.

Constant low audio hum	Faulty power supply	Check external DC supply and the PC supply.
	Open ground	Check all ground wires in cabinet. Ensure AC wall outlet is properly grounded

LCD display flicker or fail to light.	Bad connection	Check for snug connection at inverter or under topper bracket.
	Loose end caps	Tighten end caps.

Game does not load.	Hard drive failure	Recover hard drive. See Hard Drive Recovery procedure in Maintenance section.
Hard drive test reports “bad” or “missing” files.		
Game fails to finish loading.		
After resetting, game still reports an error.		
Game suggests inserting a boot **(USB DRIVE)**		
Erratic game mode or attract mode.		
WARNING! Data Files Corrupted. (Game Operation May Become Unstable.) Use “Test” Switch to Enter Test Mode and Run “File Test.” Press Start To Continue.		
Game resets.	Bad file.	Run File Test. Restore hard drive.

Coin meter does not click during Test.	No pulse to meter	Check wiring from meter to RIO board
	Faulty meter	Replace coin meter

Improper number of credits given when coins or bills are inserted	Incorrect setting in Adjustments	Adjust settings
	Faulty wiring	Disconnect cabinet from AC power. Verify wires are firmly connected to coin mech and bill validator and ground wires are properly connected. Verify no wires are frayed or shorting to ground.
	Faulty coin mech	Verify coin mech is not jammed. Ensure coin mech is properly aligned and latched to coin door.

Coin meter does not work	Blown fuse(s) on PCB	Replace 5A fuse(s) on PCB

Exits Test Mode every 3 seconds	Test button stuck in ON position	Slide or toggle button off after Test Menu appears

NO VIDEO message	Video cables not plugged in properly	Reattach and tighten power and video cable to monitor.

No Signal	Video or power cable not secure	Check and secure cable.
	PC not turned on	Turn PC power switch on. Ensure IEC cable tightly plugged in. Trace cable back to source to ensure continuity.

Dongle Not Present	Dongle missing or disconnected	Find dongle cable and reseat in USB port
	Faulty USB port	Insert dongle cable in different USB port

Connect RIO Board or *RIO Board Missing*	USB cable disconnected	Check USB connection from PC to RIO board
	No power to RIO board	Check for proper voltage (+5V, +12V) at P2 connector

GALAGA ASSAULT

ELECTRICAL DIAGRAM

AND

MECHANICAL ILLUSTRATIONS

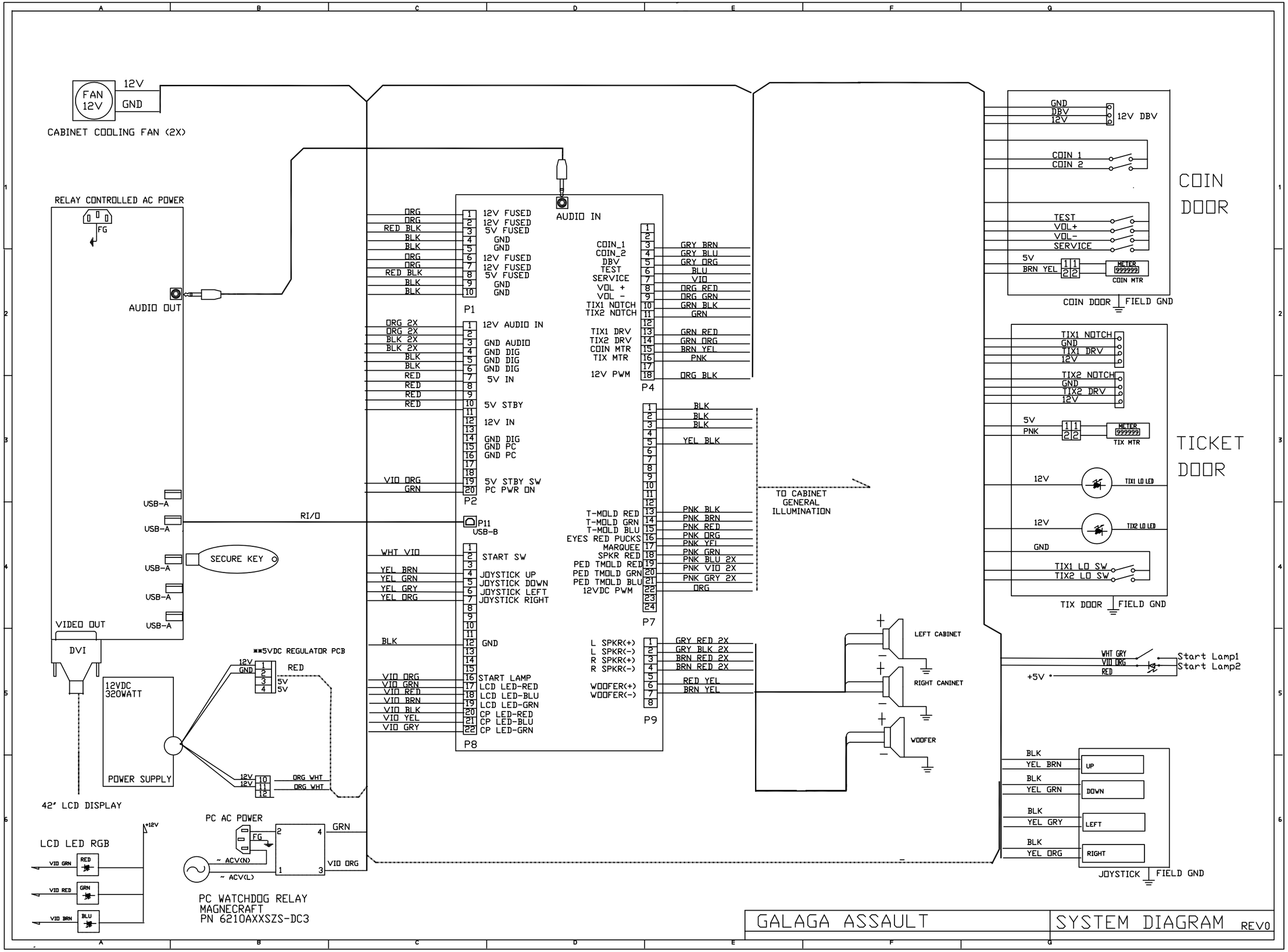
FAN 12V
12V
GND
CABINET COOLING FAN (2X)
RELAY CONTROLLED AC POWER
FG
AUDIO OUT
USB-A
USB-A
USB-A
USB-A
USB-A
SECURE KEY
VIDEO OUT
DVI
42" LCD DISPLAY
12VDC 320WATT
POWER SUPPLY
**5VDC REGULATOR PCB
12V
GND
RED
5V
5V
12V
12V
ORG WHT
ORG WHT
LCD LED RGB
+12V
VIO GRN
RED
VIO RED
GRN
VIO BRN
BLU
PC AC POWER
FG
~ ACV(N)
~ ACV(L)
GRN
VIO ORG
PC WATCHDOG RELAY
MAGNECRAFT
PN 6210AXXSZS-DC3
RI/O
AUDIO IN
ORG
ORG
RED BLK
BLK
BLK
ORG
ORG
RED BLK
BLK
BLK
P1
12V FUSED
12V FUSED
5V FUSED
GND
GND
12V FUSED
12V FUSED
5V FUSED
GND
GND
ORG 2X
ORG 2X
BLK 2X
BLK 2X
BLK
BLK
RED
RED
RED
RED
12V AUDIO IN
GND AUDIO
GND DIG
GND DIG
GND DIG
5V IN
5V STBY
12V IN
GND DIG
GND PC
GND PC
VIO ORG
GRN
5V STBY SW
PC PWR ON
P2
P11
USB-B
WHT VIO
START SW
YEL BRN
YEL GRN
YEL GRY
YEL ORG
JOYSTICK UP
JOYSTICK DOWN
JOYSTICK LEFT
JOYSTICK RIGHT
BLK
GND
VIO ORG
VIO GRN
VIO RED
VIO BRN
VIO BLK
VIO YEL
VIO GRY
START LAMP
LCD LED-RED
LCD LED-BLU
LCD LED-GRN
CP LED-RED
CP LED-BLU
CP LED-GRN
P8
COIN_1
COIN_2
DBV
TEST
SERVICE
VOL +
VOL -
TIX1 NOTCH
TIX2 NOTCH
TIX1 DRV
TIX2 DRV
COIN MTR
TIX MTR
12V PWM
P4
GRY BRN
GRY BLU
GRY ORG
BLU
VIO
ORG RED
ORG GRN
GRN BLK
GRN
GRN RED
GRN ORG
BRN YEL
PNK
ORG BLK
BLK
BLK
BLK
YEL BLK
TO CABINET GENERAL ILLUMINATION
T-MOLD RED
T-MOLD GRN
T-MOLD BLU
EYES RED PUCKS
MARQUEE
SPKR RED
PED TMOLD RED
PED TMOLD GRN
PED TMOLD BLU
12VDC PWM
PNK BLK
PNK BRN
PNK RED
PNK ORG
PNK YEL
PNK GRN
PNK BLU 2X
PNK VIO 2X
PNK GRY 2X
ORG
P7
L SPKR(+)
L SPKR(-)
R SPKR(+)
R SPKR(-)
WOOFER(+)
WOOFER(-)
GRY RED 2X
GRY BLK 2X
BRN RED 2X
BRN RED 2X
RED YEL
BRN YEL
P9
LEFT CABINET
RIGHT CANINET
WOOFER
GND
DBV
12V
12V DBV
COIN 1
COIN 2
COIN DOOR
TEST
VOL+
VOL-
SERVICE
5V
BRN YEL
METER 999999
COIN MTR
COIN DOOR
FIELD GND
TIX1 NOTCH
GND
TIX1 DRV
12V
TIX2 NOTCH
GND
TIX2 DRV
12V
5V
PNK
METER 999999
TIX MTR
TICKET DOOR
12V
TIX1 LO LED
12V
TIX2 LO LED
GND
TIX1 LO SW
TIX2 LO SW
TIX DOOR
FIELD GND
WHT GRY
VIO ORG
RED
+5V
Start Lamp1
Start Lamp2
BLK
YEL BRN
UP
BLK
YEL GRN
DOWN
BLK
YEL GRY
LEFT
BLK
YEL ORG
RIGHT
JOYSTICK
FIELD GND
GALAGA ASSAULT
SYSTEM DIAGRAM
REV0

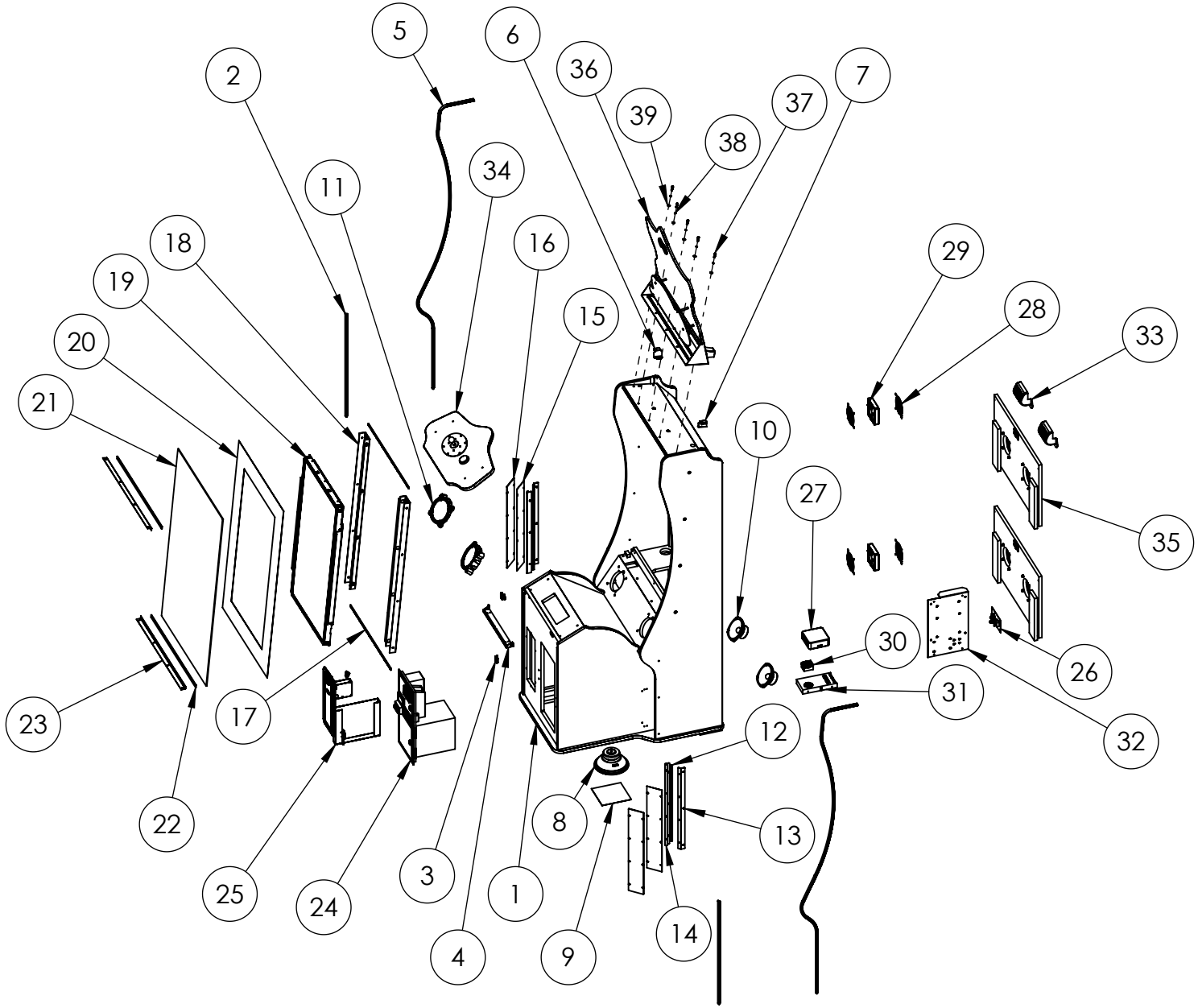

NOT SHOWN:
> Selective Hardware (including 12x wire ties)
> 500-00131-01 - RGB LED Strip Reel:
- 2X 225CM / 135 LEDs (installed in #5)
- 2X 70CM / 42 LEDs (installed in #2)

Galaga Assault Assembly - 42" LCD
(BOM on next page)

Galaga Assault Assembly - 42" LCD: BOM

ITEM NO.	PART NUMBER	DESCRIPTION	QTY.
1	601-00748-01	42" LCD Cabinet	1
2	603-00718-01 (29 in)	LED T-Molding Extrusion - 29"	2
3	600-01134-01	Front Panel T-Molding Clip	2
4	Control_Panel_Light_Assy	Control Panel Light Sub-Assembly	1
5	603-00718-01 (90 in)	LED T-Molding Extrusion - 90"	2
6	600-01717-01	Left Side Panel T-Molding Clip	1
7	600-01718-01	Right Side Panel T-Molding Clip	1
8	2-1-18-00-00-000	8" Woofer, 4 Ohm, Poly-Mica Cone (Goldwood)	1
9	Wire Mesh Grill	7.25" x 7.25"	1
10	2-1-10-00-00-000	5.25", 8 Ohm Full Range Speaker (Goldwood)	2
11	Red_Speaker_Bezel_Assy	Speaker Bezel Sub-Assembly	2
12	500-00162-55	White LED Strip Reel w/ Foam Tape: 55CM / 33 LEDs	2
13	600-01721-01	Obtuse Panel Bracket	2
14	600-01722-01	Acute Panel Bracket	2
15	606-01127-01	Panel Translite	2
16	603-00765-01	Panel Lens	2
17	500-00184-70	RGB LED Strip Reel w/ Foam Tape: 70CM / 42 LEDs	2
18	Monitor_Mounting_Bracket _&_Light_Assy	Monitor Mounting Bracket Assembly	2
19	809-00004-01	42" LCD Assembly	1
20	606-01125-01	Monitor Translite	1
21	600-01710-01	Monitor Glass	1
22	Foam_Tape_0.125Tx.625Wx 30.4375L	Single Sided Foam Tape: 1/8" Thick, 5/8" Wide, 30 7/16" Long	2
23	600-01711-01	Monitor Glass Retainer	2
24	800-00005-01	Mid-Width Coin Door Assembly (Suzo-Happ)	1
25	800-00043-01	Ticket Dispenser Door Assembly (Suzo-Happ)	1
26	AC_Plate_Assy	AC Power Plate Assembly	1
27	850-00023-01	Dell Mini PC - Inspiron 3050	1
28	800-00001-00	120mm Wire Fan Guard	4
29	820-00012-00	Cooling Fan(standard size): 12VDC, 3W, 80CFM	2
30	800-00040-01	Solid State Relay - 6210AXXSZS-DC3 (Magnecraft)	1
31	500-00193-01	Switching Power Supply: 320W, 12V, 26.7A, PFC (Mean Well)	1
32	RIO_Hardware_Assy	RIO Assembly w/ Mounting Plate	1
33	800-00010-01	Midway Handle Vent (Suzo-Happ)	2
34	Galaga_CP_Assy	Control Panel Sub-Assembly	1
35	Galaga_Back_Door_Assy	Back Door Sub-Assembly	2
36	Galaga_Marquee_Assy	Marquee Sub-Assembly	1
37	McMaster-Carr - 96075A223	Alloy Steel Pin-in-Torx Button Socket Cap Screw, Black-Oxide, 1/4"-20 Thread, 1" Length	5
38	McMaster-Carr - 93711A500	Black Oxide 18-8 Stainless Steel Split Lock Washer for Socket Head Cap Screw, 1/4" Screw Size, 0.260" ID	5
39	McMaster-Carr - 97416A119	Black-Oxide Steel SAE Flat Washer, 1/4" Screw Size, 0.281" ID, 0.625" OD	5

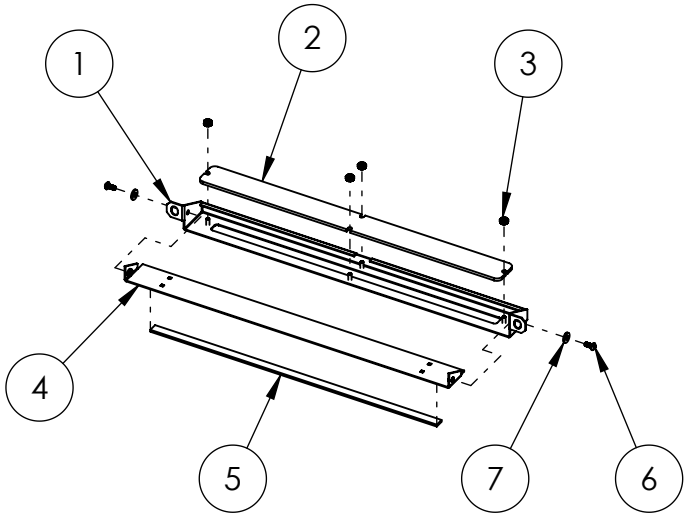

ITEM NO.	PART NUMBER	DESCRIPTION	QTY.
1	600-01723-01	Control Panel Outer Light Bracket	1
2	603-00766-01	Control Panel Light Lens	1
3	McMaster-Carr - 90675A007	Zinc-Plated Steel Hex Nut with Tooth Washer, 6-32 Thread Size, 5/16" Nut Width, 9/64" Overall Height	4
4	600-01725-01	Control Panel Inner Light Bracket	1
5	500-00184-35	RGB LED Strip Reel w/ Foam Tape: 35CM / 21 LEDs	1
6	McMaster-Carr - 96075A135	Alloy Steel Pin-in-Torx Button Socket Cap Screw, Black-Oxide, 8-32 Thread, 3/8" Length	2
7	McMaster-Carr - 97416A113	Black-Oxide Steel SAE Flat Washer, Number 8 Screw Size, 0.188" ID, 0.438" OD	2

Control Panel Light Sub-Assembly (2X Wire Ties not shown)

ITEM NO.	PART NUMBER	DESCRIPTION	QTY.
8	603-00676-01	RED LED Speaker Bezel - 5.25"	1
9	600-00673-01	Speaker Grill - 5.25"	1
10	500-00044-02	Red LED "Great Wall" Strip: 45 CM / 45 LEDs	1

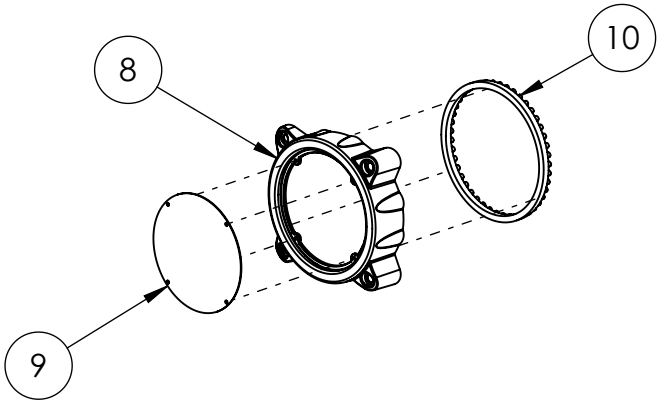

Speaker Bezel Sub-Assembly (4X 1/8" Blind Rivets not shown)

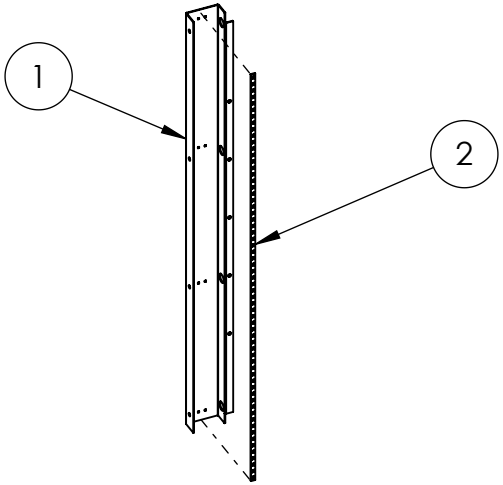

ITEM NO.	PART NUMBER	DESCRIPTION	QTY.
1	600-01707-01	Monitor Mounting Bracket	1
2	500-00184-105	RGB LED Strip Reel w/ Foam Tape: 105CM / 63 LEDs	1

Monitor Mounting Bracket Assembly (4X Wire Ties not shown)

ITEM NO.	PART NUMBER	DESCRIPTION	QTY.
3	600-01681-01	AC Electronics Plate	1
4	703W-00(slash)08	AC Receptacle: 250V, 15A (Qualtek)	1
5	McMaster-Carr - 90273A144	Zinc-Plated Steel Flat Head Phillips Machine Screw, 6-32 Thread, 1/4" Length	2
6	T9-611P-6	Thermal Circuit Breakers: 240VAC, 6A, Snap-in, Fuseholder, 1-Pole (Schurter)	1
7	1832.3312	Rocker Switch (DPST): 250VAC, 20A (Marquardt)	1

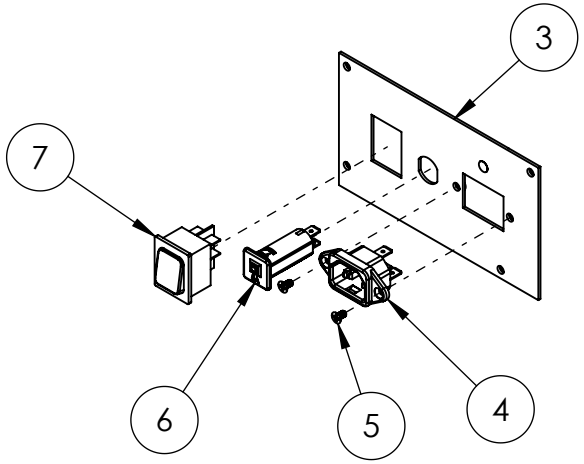

AC Power Plate Assembly

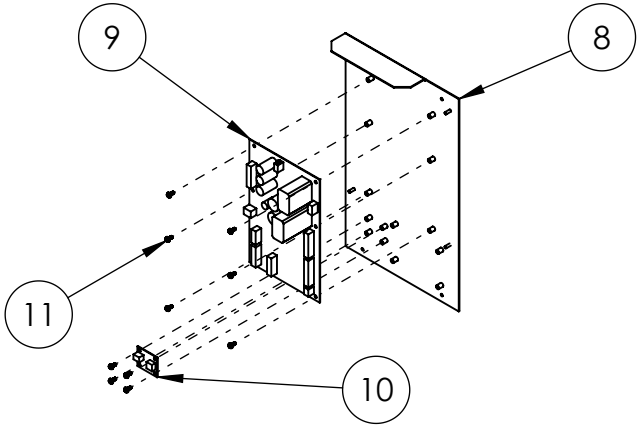

ITEM NO.	PART NUMBER	DESCRIPTION	QTY.
8	600-01501-01	RIO Mounting Plate (w/ Motion Control PCB)	1
9	500-00040-01	RIO PCB	1
10	500-00194-01	5V, 5A Switching Regulator PCB (12V input)	1
11	McMaster-Carr - 90316A192	18-8 Stainless Steel Hex Washer Head Slotted Machine Screw, 8-32 Thread, 3/8" Length	10

RIO Assembly w/ Mounting Plate

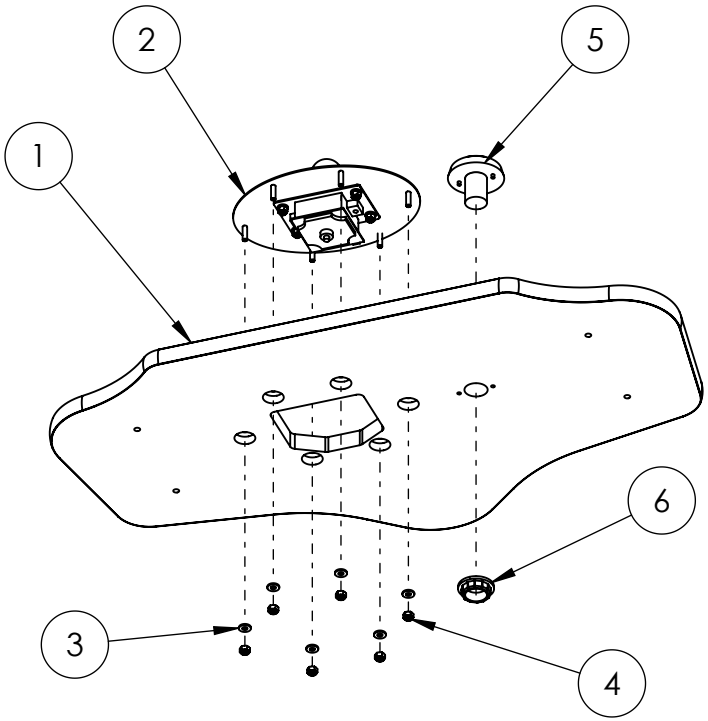

ITEM NO.	PART NUMBER	DESCRIPTION	QTY.
1	601-00750-01	Control Panel Wood	1
2	Galaga_Joystick_Assy	Joystick Sub-Assembly	1
3	McMaster-Carr - 90126A011	Zinc-Plated Steel SAE Flat Washer, Number 10 Screw Size, 0.219" ID, 0.500" OD	6
4	McMaster-Carr - 90631A411	Low-Strength Steel Nylon-Insert Locknut, Zinc-Plated, 10-32 Thread Size, 3/8" Wide, 15/64" High	6
5	702-00015-01	Large Round RED Pushbutton	1
6	Screw-in Ring Nut	included with 702-00015-01	1

Control Panel Sub-Assembly

ITEM NO.	PART NUMBER	DESCRIPTION	QTY.
7	600-01715-01	Joystick Mounting Plate	1
8	800-00062-01	RGB LED Joystick w/ Clear Plastic Shaft Sleeve: JS-EPCM-BU-35-CW-CT (Jyuee Ang)	1
9	Dust Cover	included with 800-00062-01 (Clear)	1
10	Bubble Ball Top	included with 800-00062-01 (White/Clear)	1
11	McMaster-Carr - 90126A009	Zinc-Plated Steel SAE Flat Washer, Number 8 Screw Size, 0.188" ID, 0.438" OD	4
12	McMaster-Carr - 90631A009	Low-Strength Steel Nylon-Insert Locknut, Zinc-Plated, 8-32 Thread Size, 11/32" Wide, 15/64" High	4

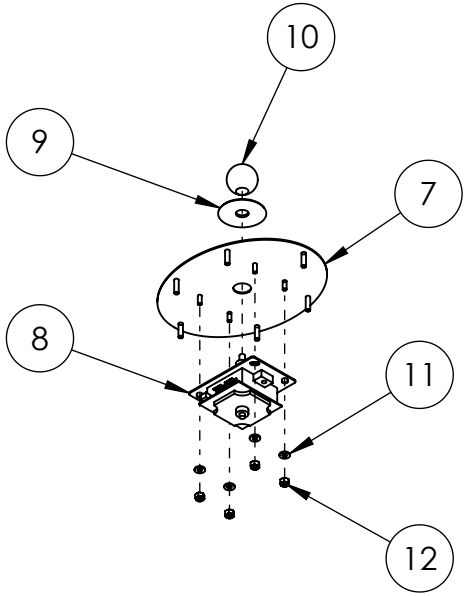

Joystick Sub-Assembly

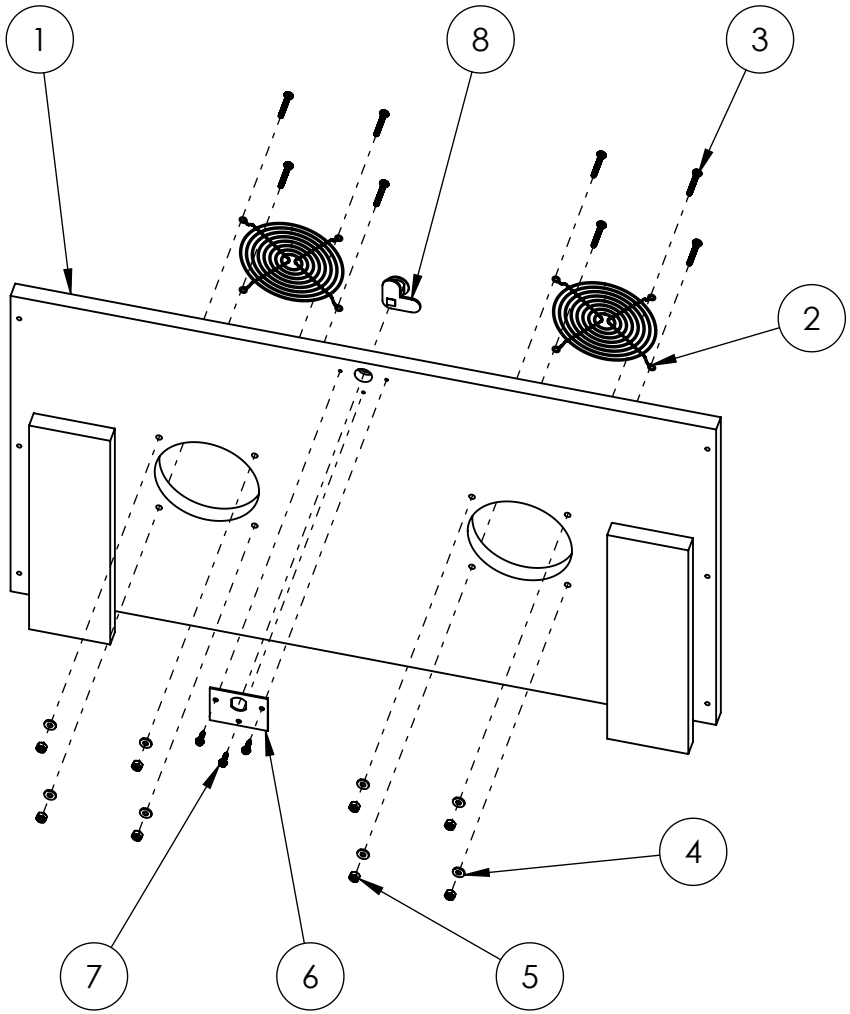

ITEM NO.	PART NUMBER	DESCRIPTION	QTY.
1	601-00749-01	Back Door	1
2	800-00001-00	120mm Wire Fan Guard	2
3	McMaster-Carr - 90272A835	Zinc-Plated Steel Pan Head Phillips Machine Screw, 10-32 Thread, 1-1/4" Length	8
4	McMaster-Carr - 90126A011	Zinc-Plated Steel SAE Flat Washer, Number 10 Screw Size, 0.219" ID, 0.500" OD	8
5	McMaster-Carr - 90631A411	Low-Strength Steel Nylon-Insert Locknut, Zinc-Plated, 10-32 Thread Size, 3/8" Wide, 15/64" High	8
6	600-00043-01	Lock Retainer Plate	1
7	McMaster-Carr - 90054A196	Hex Washer Head Screw for Sheet Metal, Zinc-Plated Steel, Slotted, Number 8 Size, 5/8" Length	3
8	150-00001-00	Standard Door Lock Assembly (for 3/4" Panels)	1

Back Door Sub-Assembly

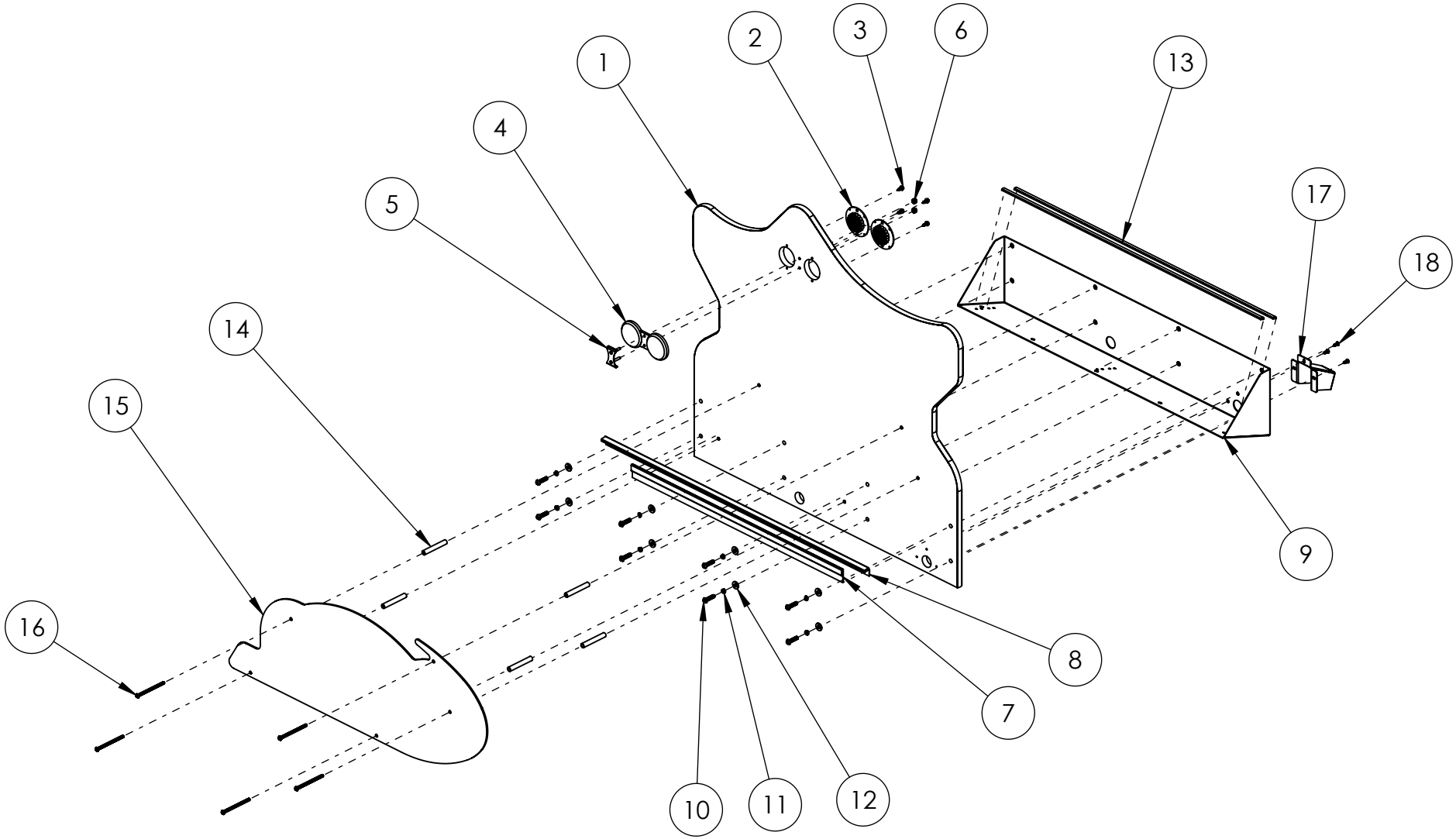

NOT SHOWN:
> 6X Wire Ties
> Staples (for LED Sub-Assemblies)

Marquee Sub-Assembly
(BOM on next page)

Marquee Sub-Assembly: BOM

ITEM NO.	PART NUMBER	DESCRIPTION	QTY.
1	601-00751-01	Marquee Backboard	1
2	500-00204-01	RED LED Superpuck PCB	2
3	McMaster-Carr - 90054A194	Hex Washer Head Screw for Sheet Metal, Zinc-Plated Steel, Slotted, Number 8 Size, 1/2" Length	4
4	603-00767-01	Acrylic Eyes	1
5	600-01724-01	Eye Bracket	1
6	McMaster-Carr - 90631A009	Low-Strength Steel Nylon-Insert Locknut, Zinc-Plated, 8-32 Thread Size, 11/32" Wide, 15/64" High	2
7	Marquee_LED_Flat_Assy	Flat LED Sub-Assembly	1
8	Marquee_LED_Angle_Assy	Angled LED Sub-Assembly	1
9	600-01716-01	Marquee Bracket	1
10	McMaster-Carr - 96075A223	Alloy Steel Pin-in-Torx Button Socket Cap Screw, Black-Oxide, 1/4"-20 Thread, 1" Length	8
11	McMaster-Carr - 93711A500	Black Oxide 18-8 Stainless Steel Split Lock Washer for Socket Head Cap Screw, 1/4" Screw Size, 0.260" ID	8
12	McMaster-Carr - 97416A119	Black-Oxide Steel SAE Flat Washer, 1/4" Screw Size, 0.281" ID, 0.625" OD	8
13	500-00206-01	White LED Weatherproof Strip Tape: 65CM / 39 LEDs	2
14	600-01001-01	2.50" Spacer Sleeve	5
15	606-01126-01	Galaga Assault - Marquee Logo	1
16	McMaster-Carr - 91255A030	Alloy Steel Button-Head Socket Cap Screw, Black-Oxide, 10-32 Thread, 3" Long	5
17	600-01720-01	Marquee Harness Bracket	1
18	McMaster-Carr - 95638A194	Tamper-Resistant Screw for Sheet Metal, Pin-in-Torx, 18-8 Stainless Steel, Button Head, Number 8 Size, 1/2" Long, PAINT BLACK	3

ITEM NO.	PART NUMBER	DESCRIPTION	QTY.
19	603-00762-01	LED Holder Extrusion (Standard) - 24"	1
20	500-00093-60	White LED Strip Reel: 60CM / 36 LEDs	1

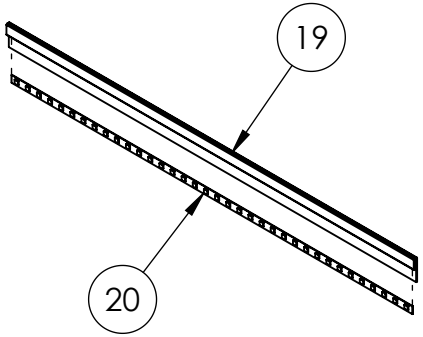

Flat LED Sub-Assembly

ITEM NO.	PART NUMBER	DESCRIPTION	QTY.
21	603-00763-01	LED Holder Extrusion (Angled) - 30"	1
22	500-00093-75	White LED Strip Reel: 75CM / 45 LEDs	1

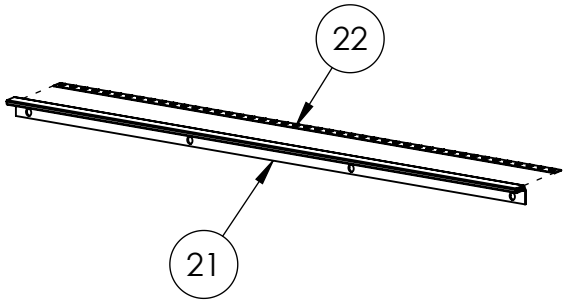

Angled LED Sub-Assembly

GENERAL PARTS AND SERVICE CONTACT INFORMATION:

BANDAI NAMCO Amusement America Contacts and Personnel:

MAIN NUMBER: **847-264-5610**

MAIN FAX: **847-264-5611**

PARTS SALES: **847-264-5637**

TECH SERVICES: **847-264-5636**

PARTS & TECH SERVICES FAX: **847-264-5613**

GENERAL INFORMATION: arcadeinfo@bandainamco-am.com

PARTS: parts@bandainamco-am.com

SERVICE: service@bandainamco-am.com

www.namcoamerica.com