namco®

TANK! TANK! TANK!

Photo shows 2 games linked together for 4 player action.

Part No. TA45-12767-00

⚠WARNING

- To ensure safe operation of the game machine, be sure to read this Operation Manual before use.
- Keep this Operation Manual in a safe place for quick access whenever needed.

NAMCO BANDAI Games Inc.

IMPORTANT

Read PRECAUTIONS and INSTALLATION Sections before operating game

RF Notice

Note: This equipment has been tested and found to comply with the limits for a Class A digital device, pursuant to Part 15 of the FCC Rules. These limits are designed to provide reasonable protection against harmful interference when the equipment is operating in a commercial environment. This equipment uses, and can radiate radio frequency energy and, if not installed and used in accordance with the instruction manual, may cause harmful interference to radio communications. Operation of this equipment in a residential area is likely to cause harmful interference in which case the user will be required to correct the interference at his own expense.

Copyright 2008 NAMCO BANDAI GAMES All rights reserved

No part of this publication may be reproduced by any mechanical photographic, or electronic process, or in the form of a photographic recording, nor may it be stored in a retrieval system, transmitted, or otherwise copied for public or private use, without permission from NAMCO BANDAI GAMES.

INTRODUCTION

Thank you for purchasing the "TANK! TANK! TANK!" game machine (hereafter referred to as the "machine").

This operation manual describes:

- How to install, operate, relocate, transport, maintain and discard the machine safely and properly
- How to operate the machine correctly and make full use of its features
- How to ensure safety of players and bystanders

Inquiries regarding this machine and its repair

- For further information about the machine and its repair, contact your distributor.

The software included in the machine is protected by copyright laws.
The software must not be copied, modified, distributed publicly, or used for purposes other than the operation of this game machine.
Violators of copyright laws may be subject to criminal penalties.
Do not use the software storage media in any other game machine; otherwise, machine malfunctions may result.

Some parts of the software used in this game machine are applicable to GNU General Public License ("GPL") and GNU Lesser General Public License ("LGPL"). The customer is allowed to obtain, modify and redistribute the source codes of these parts of the software. However, those source codes constitute only portions of this product, and it does not imply that the source codes of the entire product can be obtained, modified or redistributed.

Regarding GPL and LGPL, visit the following websites.
http://www.fsf.org/licensing/licenses/gpl.html
http://www.fsf.org/licensing/licenses/lgpl.html

If you wish to obtain GPL/LGPL source codes used in this machine, please contact your distributor.

The software in the machine uses the following middleware and libraries.
Havok® © Copyright 1999-2009 Havok.com Inc.
Bink Video. Copyright © 1997-2009 RAD Game Tools, Inc.

1. SAFETY PRECAUTIONS - Be sure to read these instructions to ensure safety -

Instructions to the owner

- If you entrust another party to perform installation, operation, relocation, transportation, maintenance or discarding of the machine, instruct the concerned party to read and observe all the instructions and precautions in this operation manual regarding the particular action to be taken.

1-1 Magnitudes of risk

On the labels attached to the machine and in this operation manual, precautions regarding safety and property damage are classified as shown below in accordance with the magnitude of the particular risk.

⚠**WARNING** : Failure to prevent the indicated risk may result in death or serious injury.

⚠**CAUTION** : Failure to prevent the indicated risk may result in minor injury or property damage.

Notes related to machine functions but not to safety are marked with the following indication.

NOTICE : Note related to product function or protection.

1-2 Definition of the term "technician"

This operation manual is written for arcade personnel. However, the sections marked "To be conducted by a technician only" in the table of contents are written for technicians. These tasks should be conducted by technicians only.

Technician: A person engaged in machine design, manufacture, inspection or maintenance service for a manufacturer of amusement equipment, or a person who has technical knowledge related to electricity, electronics or mechanical engineering at a level equal to or higher than that of a technical high school graduate and is engaged routinely in the maintenance and management (including repair) of amusement machines.

1-3 Top-priority safety precautions

⚠WARNING

- Should any abnormality occur, turn off the power switch immediately to stop operating the machine. Then, unplug the power cord plug from the AC outlet. Operating the machine without correcting abnormalities can result in a fire or accident.
- Some monitor sections remain hot or charged with high voltage even after the power switch is turned off. Do not touch the monitor unnecessarily in order to prevent electric shock and burns.
- Dust accumulated on the power cord plug may cause a fire. Check the power cord plug regularly and remove dust.
- Insert the power cord plug firmly into the AC outlet. Poor contact may cause overheating that can lead to a fire or burns.
- A damaged power cord can cause a fire, electric shock or electrical leakage. Observe the following cautions.
  - Keep the power cord away from heating devices.
  - Do not twist the power cord.
  - Do not bend the power cord forcibly.
  - Do not alter the power cord.
  - Do not bundle the power cord.
  - Do not pull the power cord. (Always unplug by holding the power cord plug, and avoid pulling the power cord.)
  - Do not place anything on the power cord.
  - Do not get the power cord caught by the machine, other equipment or wall.
  - Do not do anything else that might damage the power cord.
- Do not wet the power cord or power cord plug with water. Water can cause an electric shock or electrical leakage.
- Do not touch the power cord plug with a wet hand. Doing so can result in an electric shock.
- The machine's rated supply voltage and maximum consumption current are 120 VAC and 12.5A (main unit: 120VAC and 5.8A ; Compressor Assy: 120 VAC and 6.7A), respectively. To prevent fire and electric shock, be sure to use interior wiring that conforms to these power supply specifications.
- Operate the machine with a power supply voltage in the range of 110 to 1 130 VAC. Operating the machine with a supply voltage outside the specified range may cause a fire or electric shock. To ensure that the machine operates in optimum condition, maintain the power supply at 120 VAC.
- Use consumables and service parts (including fasteners) specified by our company. To order parts, contact your distributor.
- Do not convert the machine without permission. Do not perform any work that is not described in this operation manual. Unauthorized conversion of the machine may create unforeseen hazards.
- When transferring the ownership of the machine, be sure to provide this operation manual together with the game machine.

1-4 Description of warning labels attached to the machine

⚠WARNING

- The warning labels describe important safety precautions. Be sure to observe the following:
  - To ensure that the warning labels attached to the machine are easily legible, install the machine at an appropriate location with ample illumination and keep the labels clean at all times. Also, make sure that the labels are not hidden behind another game machine or other objects.
  - Do not remove or alter the warning labels.
  - If the warning labels become excessively dirty or damaged, replace them with new labels. To order warning labels, contact your distributor.

Monitor Base Assy (rear view)

Ride (L), (R) Assy

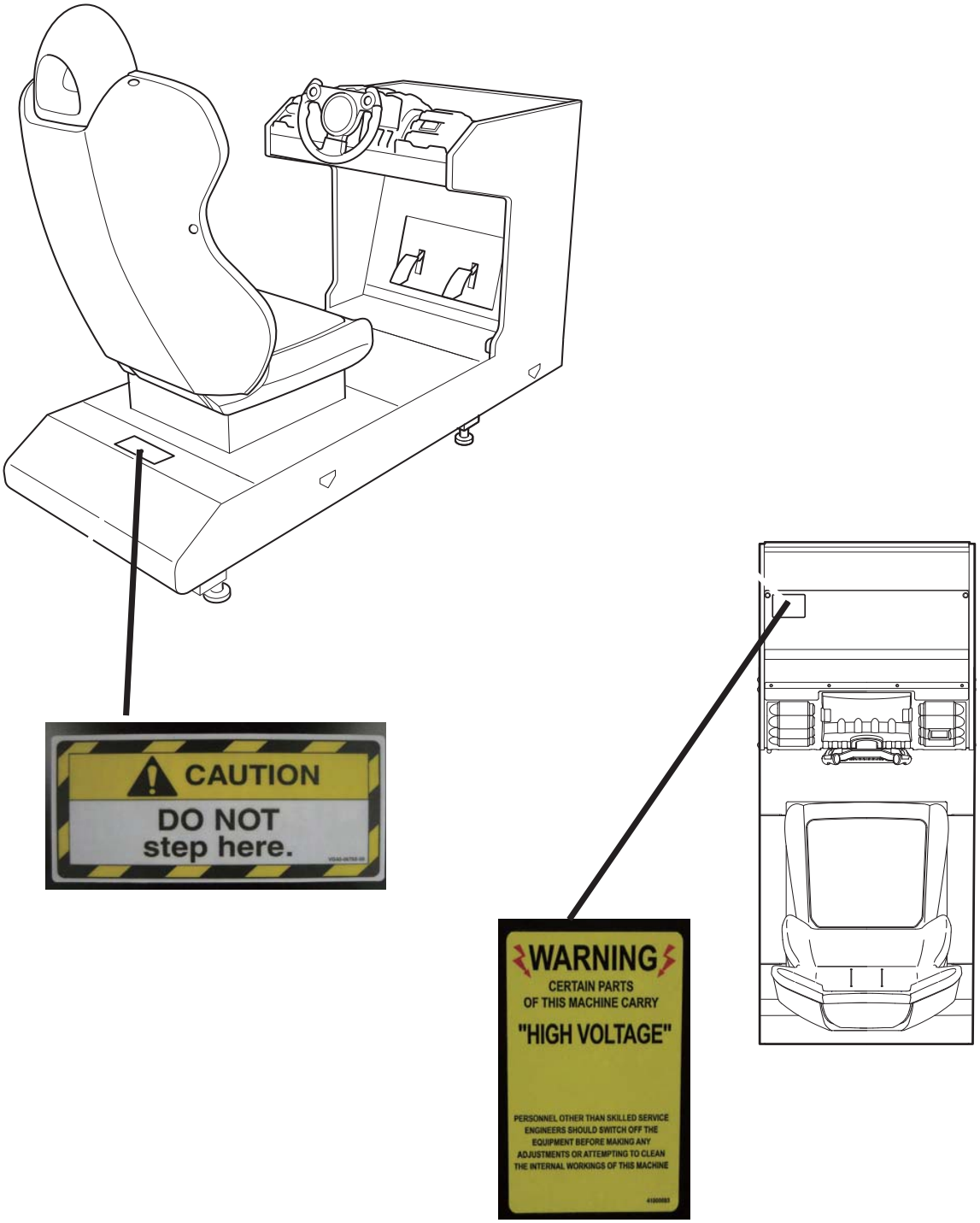
CAUTION
DO NOT
step here.
WARNING
CERTAIN PARTS
OF THIS MACHINE CARRY
"HIGH VOLTAGE"
PERSONNEL OTHER THAN SKILLED SERVICE
ENGINEERS SHOULD SWITCH OFF THE
EQUIPMENT BEFORE MAKING ANY
ADJUSTMENTS OR ATTEMPTING TO CLEAN
THE INTERNAL WORKINGS OF THIS MACHINE

Compressor Assy

2. SPECIFICATIONS

(1) Rated power supply 120VAC
(2) Maximum power consumption 1500 W (main unit: 700W, Compressor Assy: 800W)
(3) Maximum current consumption 12.5 A (main unit: 5.8A, Compressor Assy: 6.7 A)
(4) Coin box capacity Approx. 3,000 coins
(5) Display device LCD monitor
(6) Dimensions
① As installed 97″ (W) x 73″ (D) x 99″ (H)

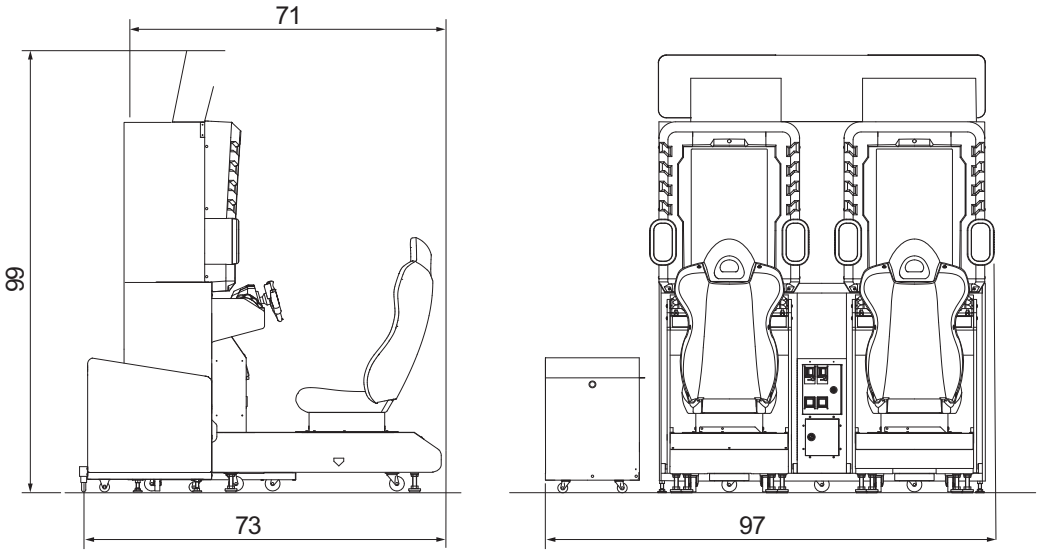

② When divided
Front Assy 72.5″ (W) x 45″ (D) x 75″ (H)

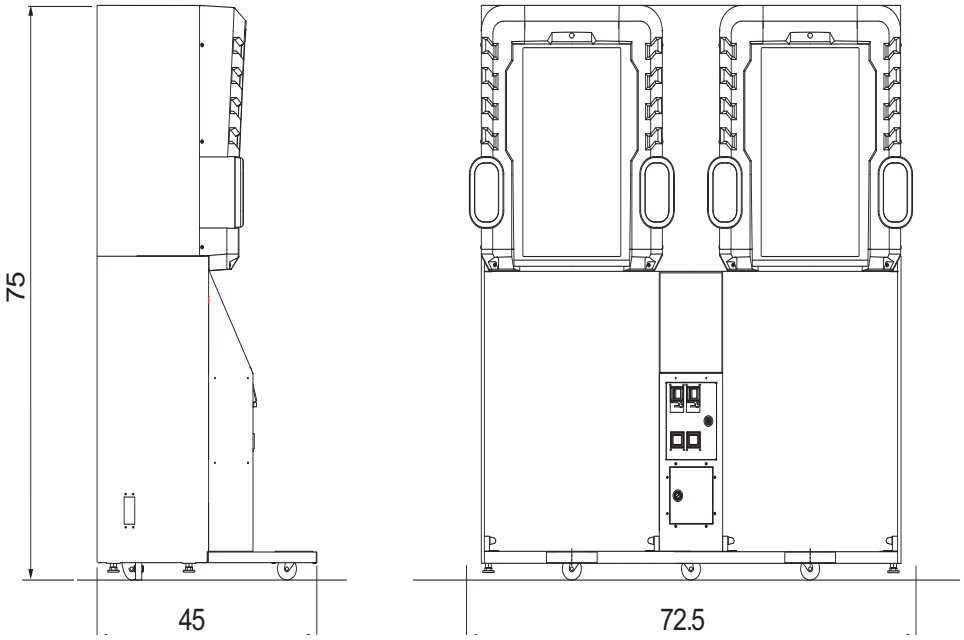

Ride (L), (R) Assy 26″ (W) x 61″ (D) x 52″ (H)

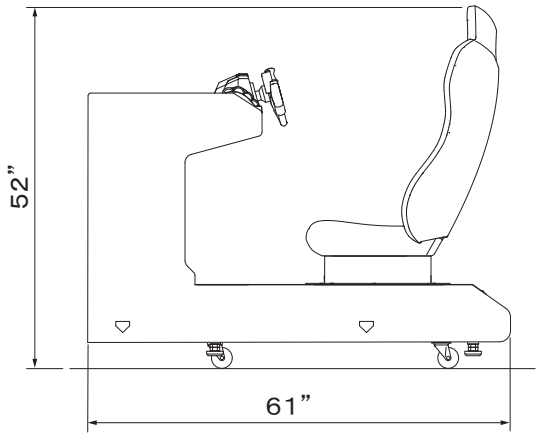

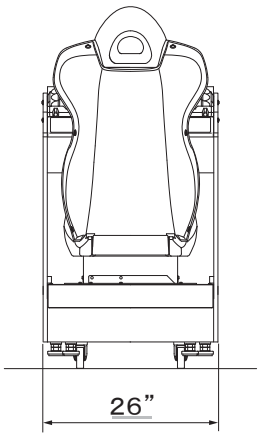

Signboard Assy 63.5″ (W) x 1/4″ (D) x 24″ (H)

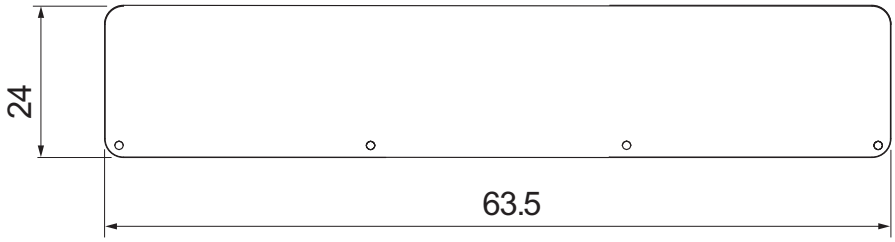

Compressor Assy 24.5″ (W) x 19″ (D) x 30″ (H)

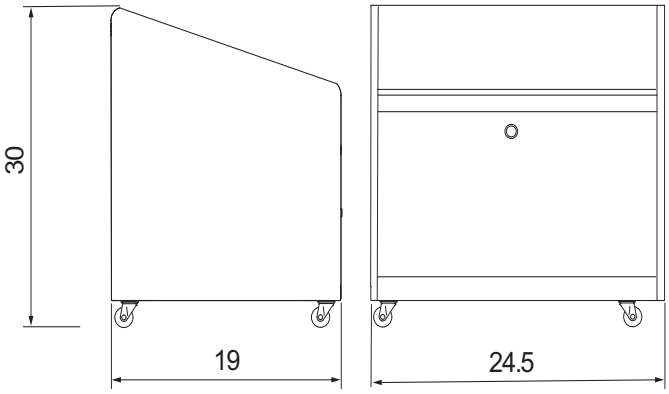

(7) Weight

① As installed Approx. 645 kg

② When divided

Front Assy	Approx. 255 kg
Ride (L), (R) Assy	Approx. 145 kg
Signboard Assy	Approx. 18 kg
Compressor Assy	Approx. 80 kg

NOTES

3. CHECKING THE PACKAGE CONTENTS

The product packages shipped from the factory contain the following components and parts.

NOTICE

- Make sure that all the items shown below are contained in the product packages.
- If any item is missing, contact your distributor.

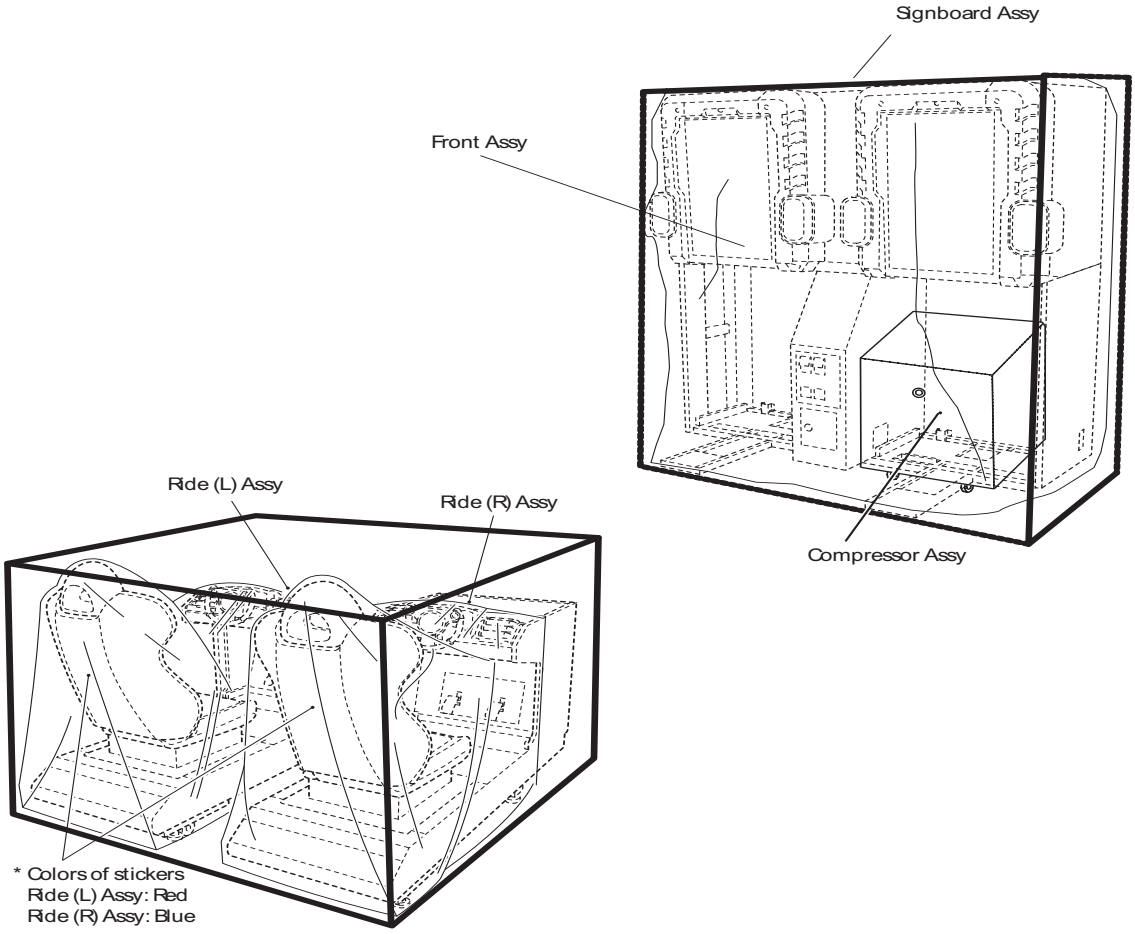

• Accessory list

No.	Name	Specification	Qty.
1	Operation Manual (this manual)		1
2	Maintenance key		2
3	Coin box key		2
4	Torx wrench	M5, T25	1
5	Communication cable	1 m	1
6	Adjuster holder		4
7	Flange-socket bolt (black)	M8 x 16, for adjuster holder	8
8	Joint		1

No.	Name	Specification	Qty.
9	USPPOP (EXP)		1
10	Awareness raising POP (EXP)		1
11	Game play instructions POP (EXP)		1
12	Vibration-isolation pad	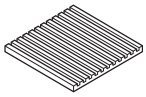	4

4. OVERALL CONSTRUCTION (Names of Parts)

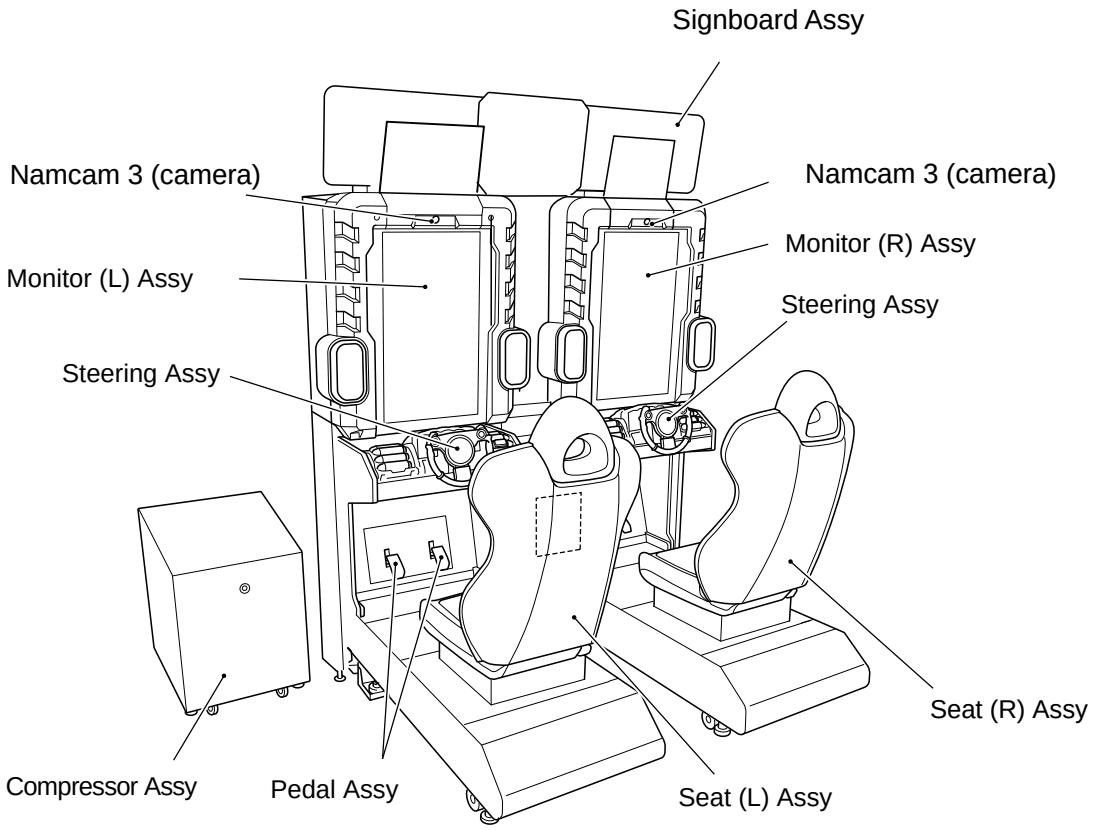

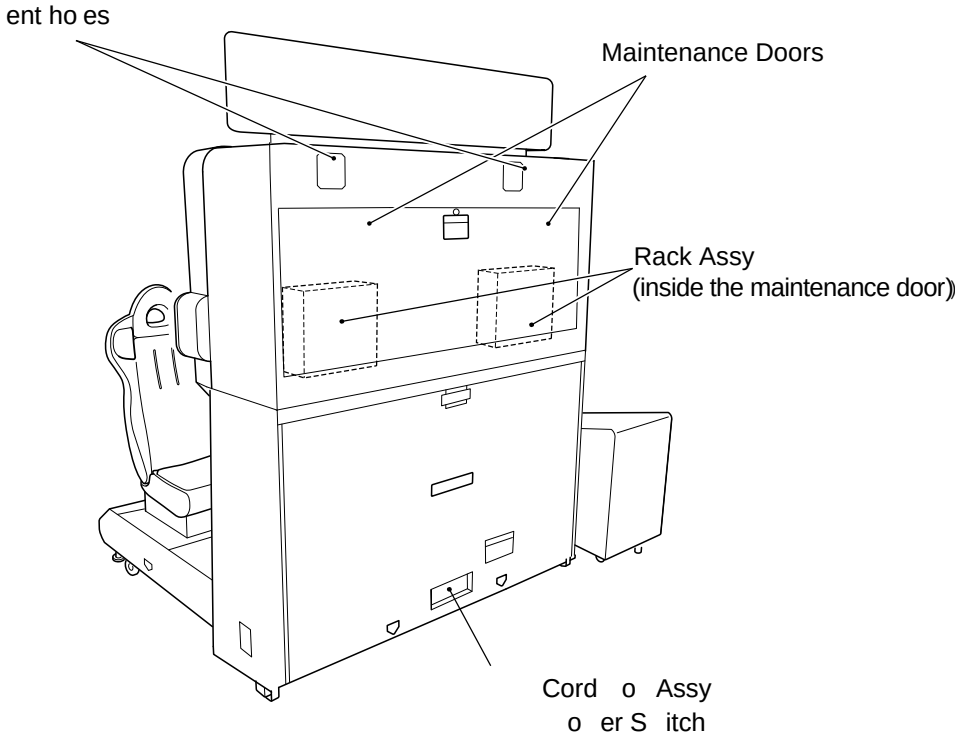

5. INSTALLATION

WARNING

- Install the machine according to the instructions and procedures specified in this operation manual. Failure to follow the specified procedures may result in a fire, electric shock, injury or machine malfunctions.
- Insert the power cord plug firmly into the AC outlet. Poor contact may cause overheating that can lead to a fire or burns.
- Be sure to connect the ground lead. If the ground lead is not connected, electric shock can result in case of electrical leakage. (See "5-5 Connecting the power cord and ground lead.")
- Install the machine securely by using the level adjusters. Unstable machine installation can result in an accident or injury. (See" 5-3-2 Adjusting the level adjusters on the Front Assy" and "5-3-4 Connecting the Ride (L), (R) Assys.")

5-1 Installation conditions

WARNING

- Do not place items near the vent holes on the rear panel of the main unit and Compressor Assy, or block them with a wall. If those openings are blocked, the inside of the machine becomes extremely hot and can cause a fire or malfunction.

5-1-1 Locations to avoid

WARNING

- The machine is designed for indoor use only. Never install the machine outdoors or at any of the following locations:
  - Place in direct sunlight
  - Place exposed to rain or water leakage
  - Damp place
  - Dusty place
  - Close to heating devices
  - Hot place
  - Extremely cold place
  - Place where dew condensation may occur due to temperature differences
  - Place where the machine may become an obstruction in emergencies (such as near emergency exit) and place where fire extinguisher or similar equipment is installed
  - Unstable place or location where vibrations are produced

NOTICE

The machine is equipped with a camera image capture function.
To obtain high-quality images, do not install the machine in any of the following locations.

- Place where bright light sources such as sunlight and spotlight shine directly on the camera
- Place where bright flashing light causes a strong contrast in brightness

5-1-2 Play zone for installed machine

⚠ CAUTION

- Provide an appropriate play zone so that players do not accidentally bump into observers or passersby.

NOTICE

- Provide a space of at least 20″ between the rear side of the machine and the wall or other machine so that the maintenance panel can be removed for maintenance.
- The distance from the floor to the ceiling must be at least 95″.
- The diagrams below show recommended Compressor Assy installation positions. Be sure to observe the following three points and install the Compressor Assy according to the arcade layout.
  - The joint that connects the Compressor Assy and Front Assy must not be applied with excessive force.
  - The joint that connects the Compressor Assy and Front Assy must not get in the way of players or observers.
  - The vent holes on the rear side of the Compressor Assy must not be blocked.

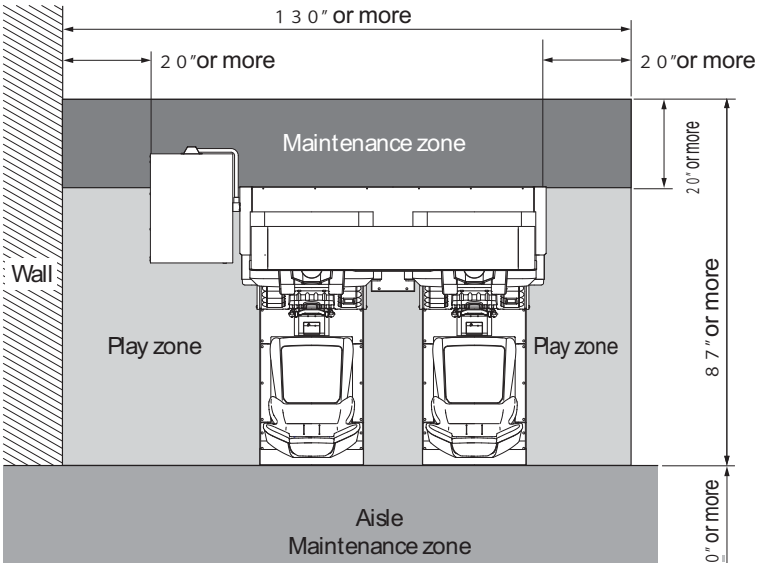

- If two or more units are installed, provide a space of at least 4″ between the units.

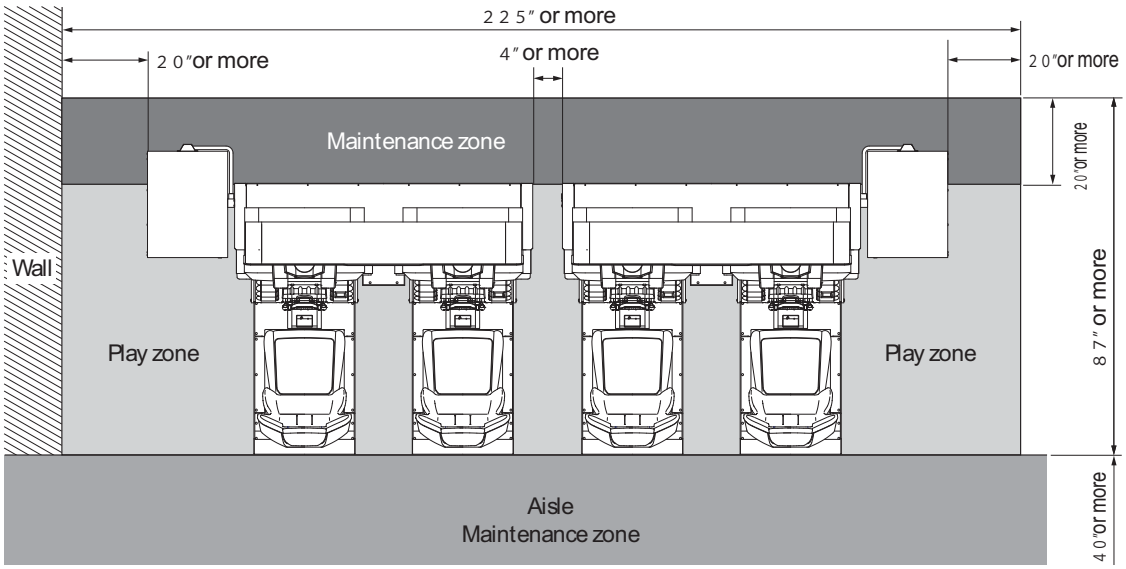

5-2 Required dimensions of carry-in passage (such as doors and corridors)

The carry-in passages must be sufficiently higher and wider than the dimensions indicated below.

- Front Assy
  72.5″(W) x 45″ (D) x 75″(H)
  Weight: Approx. 270 kg

NOTES

5-3 Assembly - To be conducted by a technician only -

5-3-1 Installing the Signboard Assy - To be conducted by a technician only -

⚠ CAUTION

- The Signboard Assy weighs approximately 18 kg. Removal of the Signboard Assy should be performed by at least two persons in a sufficiently large area to prevent accidents.

1 First Place L-shaped bracket onto Signbord. Hold the Signboard on both sides, and install it at the upper part of the Monitor Assy. Be sure to use stepladders in this installation step.

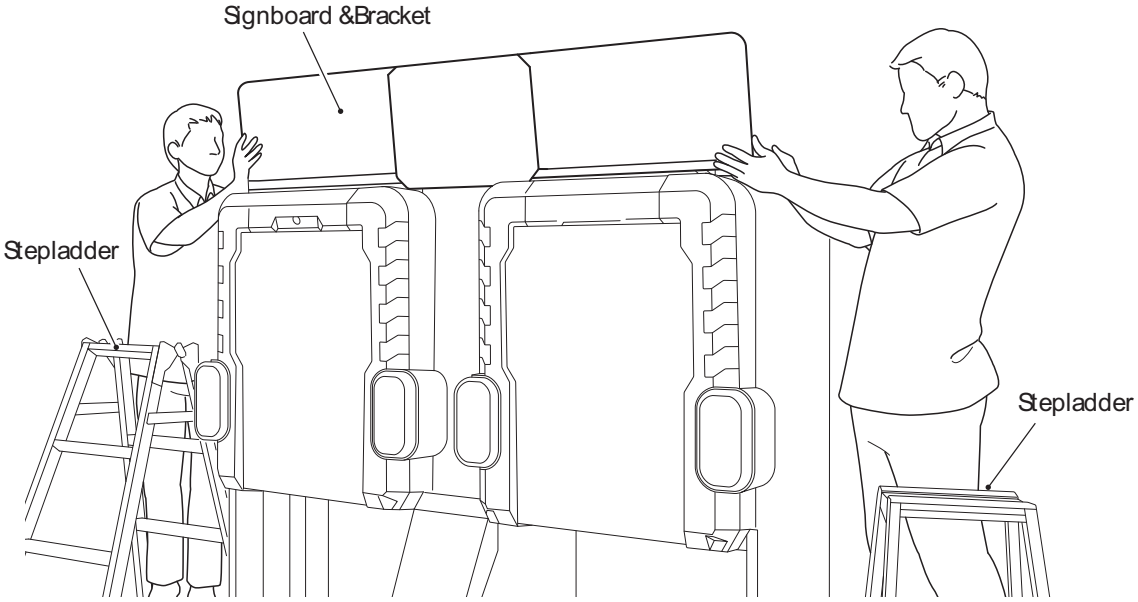

Placing bracket onto cabinet

2 Like The lager singbord ,place 2 bracket on each of The smaller boards.

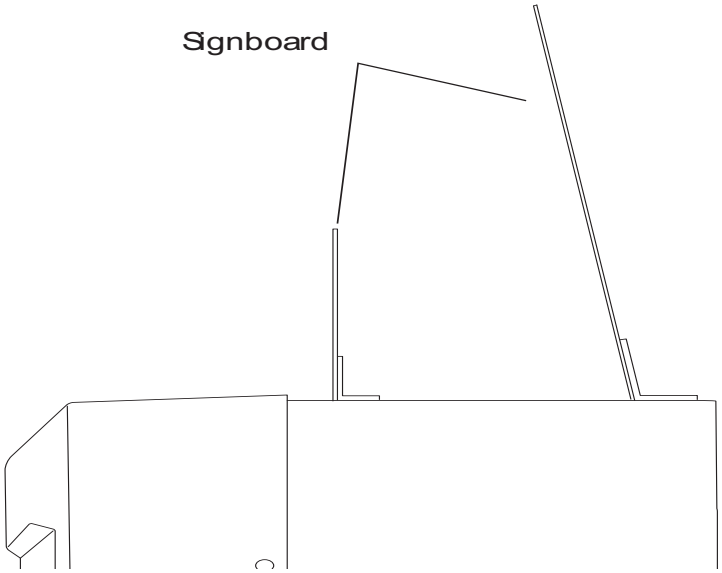

3 Screw Secure the Signboard in place by using two flange-socket bolts .

4 Connect the one fluorescent lamp connector located on the right side of the rear panel.

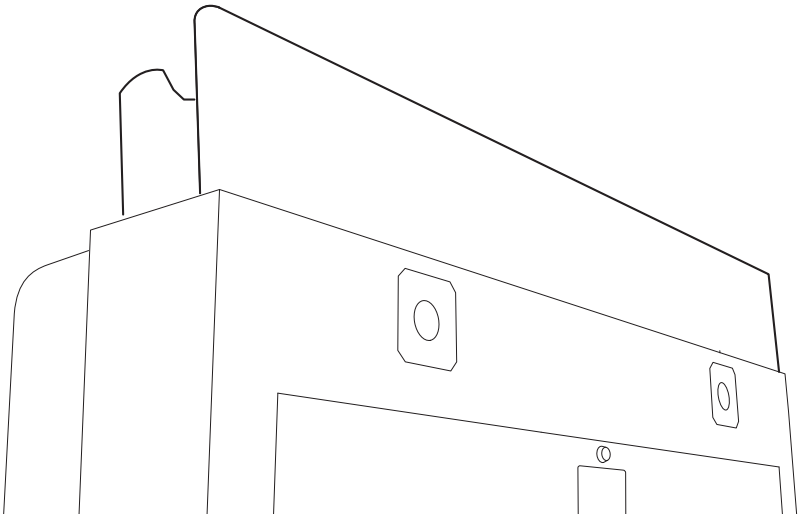

5 Screw brackets on the front side with pictures.

5-3-2 Adjusting the level adjusters on the Front Assy

- To be conducted by a technician only -

1 After installing the Front Assy according to the procedure described in "5-1 Installation conditions" , lower the four level adjusters so that the casters are lifted about 0.2" from the floor.

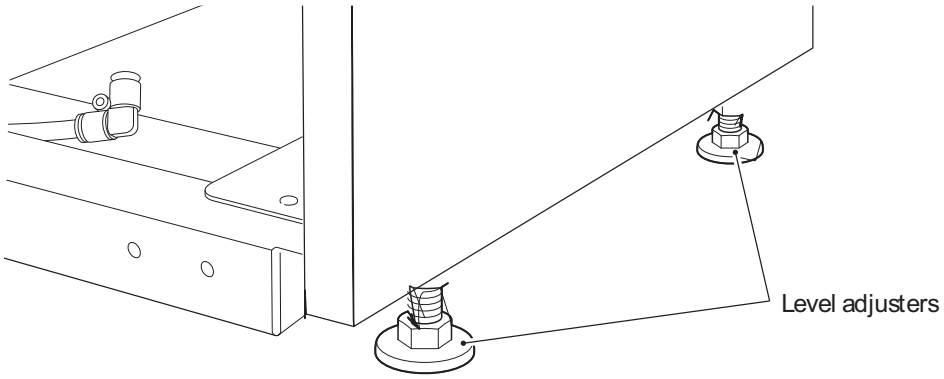

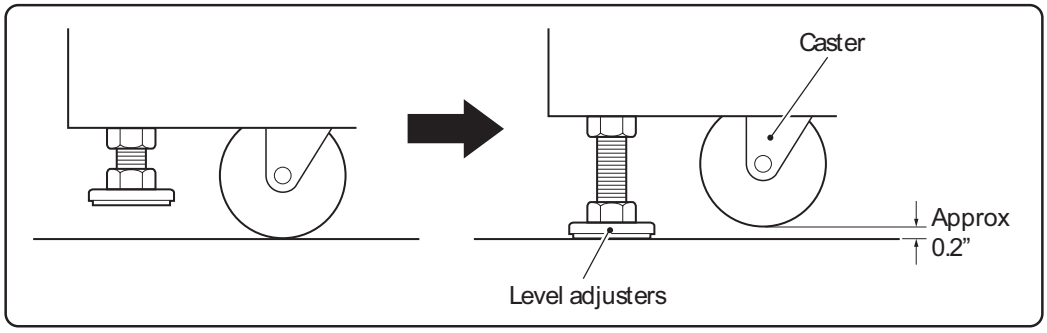

5-3-3 Installing the adjuster holders - To be conducted by a technician only -

1 Install the four adjuster holders to the Front Assy using two flange-socket bolts (M8 x 16) on each adjuster holder.

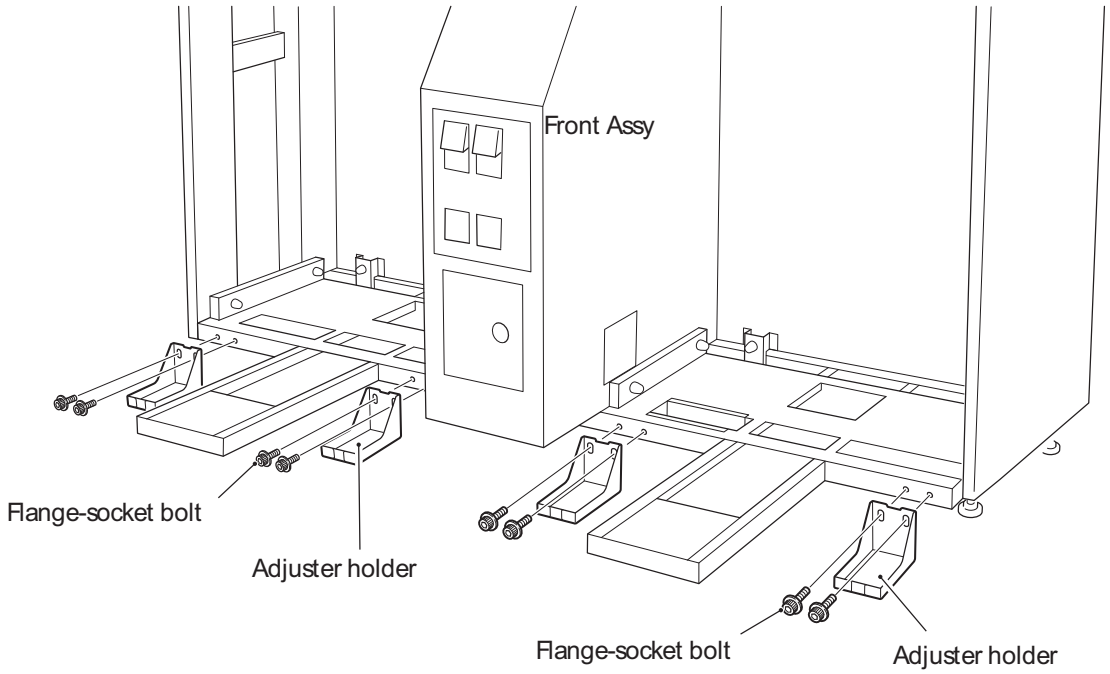

5-3-4 Connecting the Ride (L), (R) Assys

- To be conducted by a technician only -

⚠ CAUTION

- Exercise caution to prevent getting your hand or fingers caught at the joint of the Front Assy and Ride (L), (R) Assy when connecting the Ride (L), (R) Assy.

NOTICE

- When connecting the air tubes, be sure to insert the air tubes all the way for secure connection. If the air tubes are not securely attached, they can disconnect and disallow proper functioning of the machine.

1 Insert the Ride (L), (R) Assy into the Front Assy by aligning with the rubber cushions.

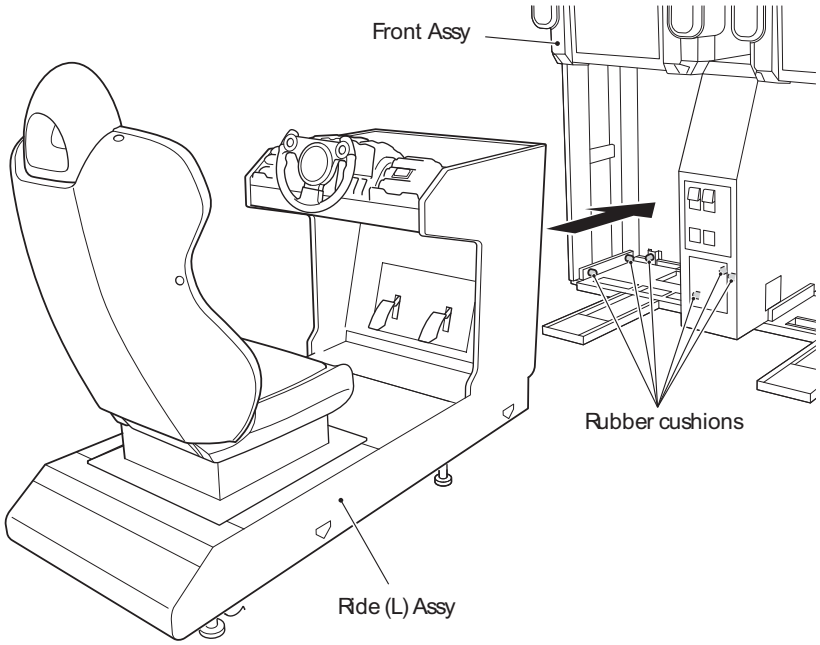

2 Adjust the position of the Ride (L), (R) Assy so that the level adjusters on the Ride (L), (R) Assy rest on the adjuster holders.

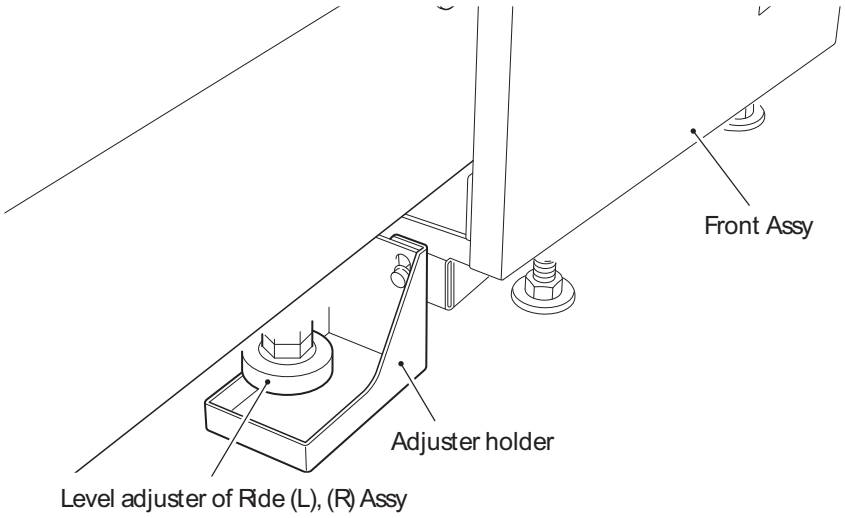

3 Remove the two button-head bolts (M5 x 30), two flat washers (M5), three button-head bolts (M5 x 12) and three flat washers (M5), and detach the floor cover.

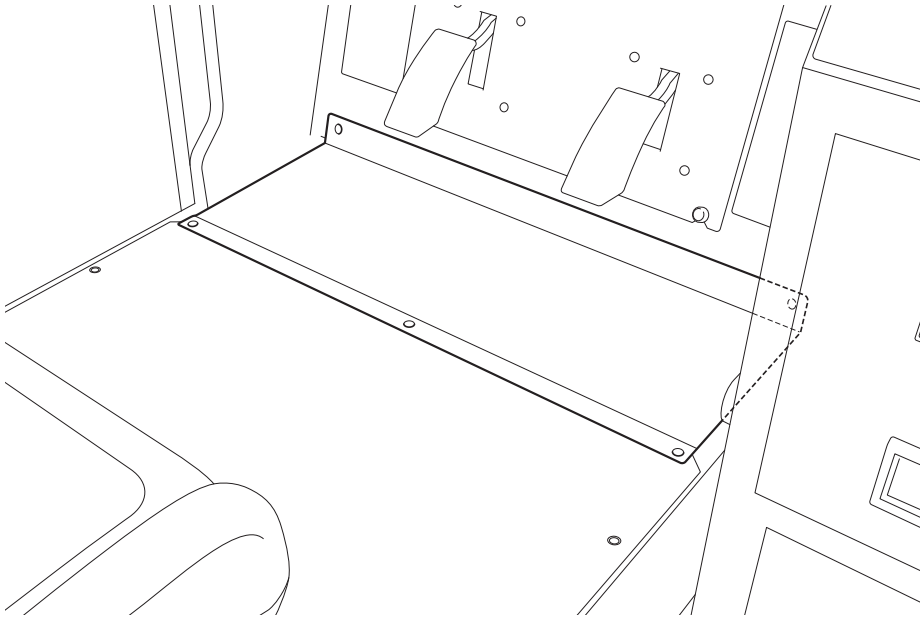

4 Connect the air tube securely to the tube joint.

Push the air tube all the way to ensure secure connection.

5 Install the stopper bracket by using two flange-socket bolts (M8 x 16).

6 Connect the two connectors.

7 Reinstall the floor cover that was removed in step **3**.

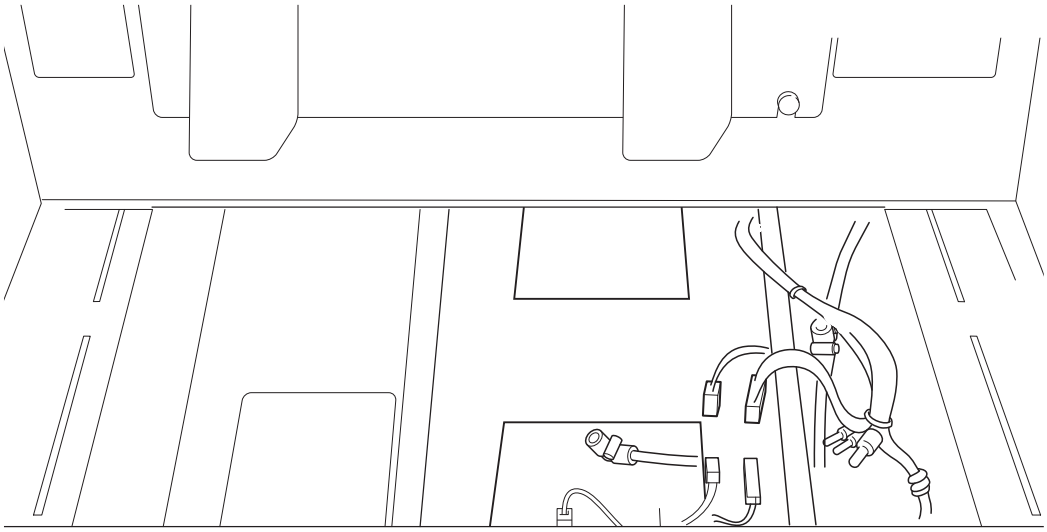

* The above illustration shows the connection of connectors and air tube for the Ride (L) Assy. In the Ride (R) Assy, the locations of the connectors and tube joint are reversed in the right-and-left direction.

8 Lower the level adjusters so that the casters on the Ride (L), (R) Assy rise about 0.2" from the floor. Then, turn the lock nuts upward to lock the level adjusters in place.

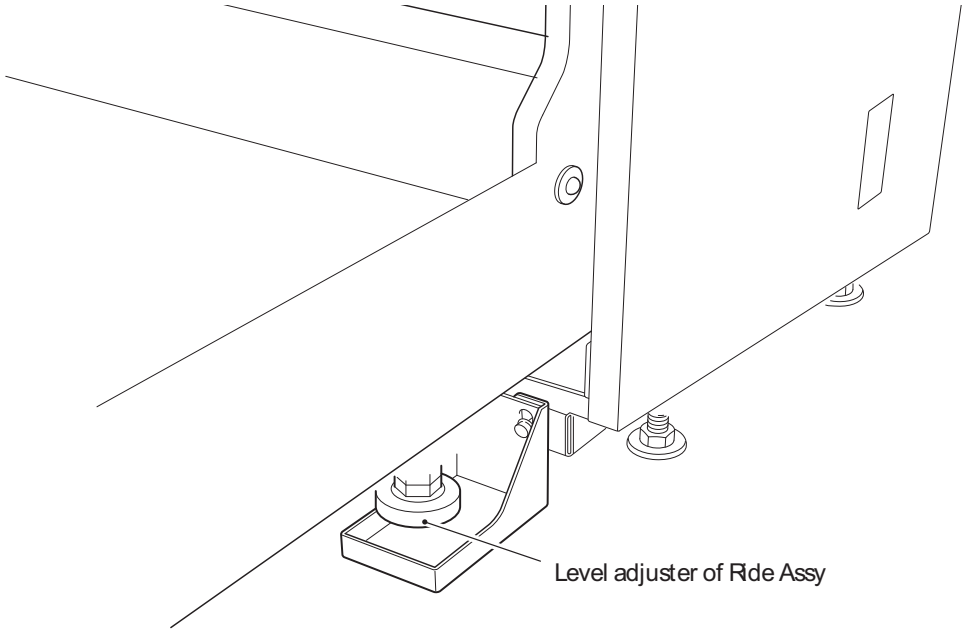

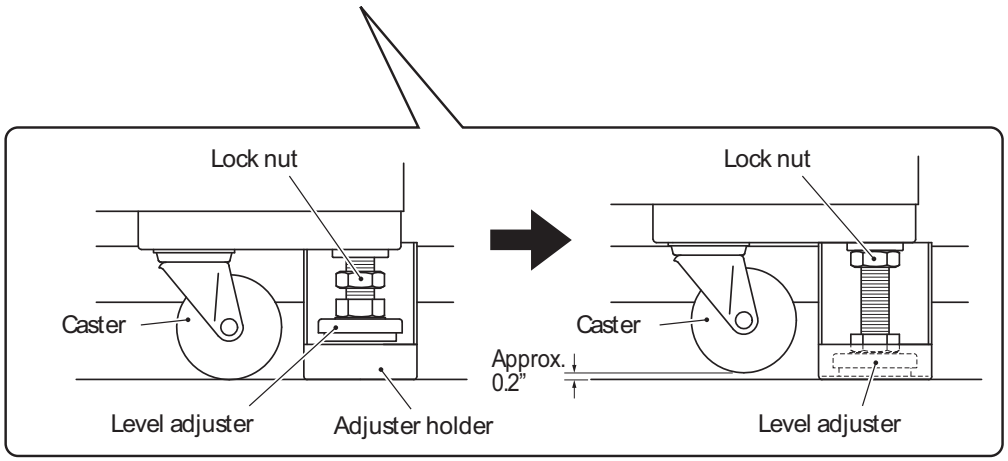

NOTICE

- Place the vibration-isolation pads under the back level adjusters of the Ride (L), (R) Assys.

5-3-5 Installing the Compressor Assy - To be conducted by a technician only -

The Compressor Assy can be installed on the left side or right side of the Front Assy, depending on the installation layout.

⚠ CAUTION

- When connecting the air tubes, be sure to insert the air tubes all the way for secure connection. If the air tubes are not securely attached, they can disconnect and disallow proper functioning of the machine.

(1) Installing the Compressor Assy on the left side of the Front Assy

1 Connect the air tube extending from the provided joint to the tube joint located on the left side of the Front Assy. Be sure to insert the air tube all the way for secure connection.

3 Connect the air tube extending from joint to the tube joint located on the back side of the Compressor Assy. Be sure to screw in the air tube all the way for secure connection.

5 The casters stopper turn "ON".

(2) Installing the Compressor Assy on the right side of the Front Assy

1 The right side of the Front Assy.
The plug always goes into the opposite side of the tube ,but sides can be switched.

Remove play from side and replace on left.
Then insert tube into B side.

2 By referring to the procedure described in "(1) Installing the Compressor Assy on the left side of the Front Assy", install the Compressor Assy and joint on the right side of the Front Assy.

5-3-6 Connecting the communication cables

- To be conducted by a technician only -

(1) Connection diagram

⚠ WARNING

- To protect the service staff and other people from an electric shock, accident and injury, and to prevent damage to the electrical circuitry of the machine, always turn off the power switch before conducting the described task.

⚠ CAUTION

- Route the communication cables so that players, observers or passers by will not trip over the cables.

Connect the machine to the provided router using the communication cables, as shown in the next page.

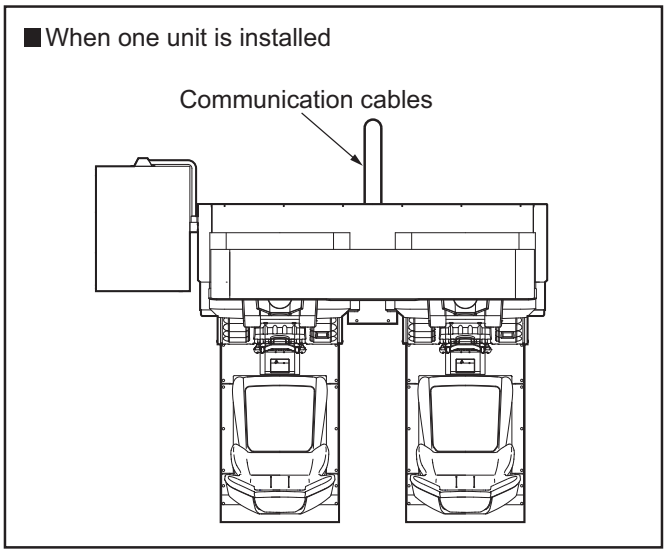

* There will be one unused communication cable.

■ When two units are installed

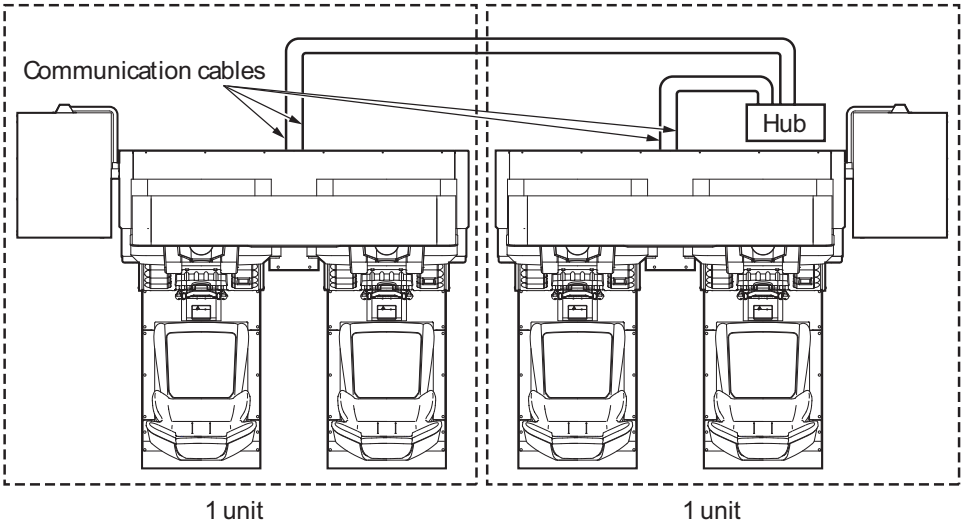

Using four communication cables and one hub (sold separately), connect the game machine units as shown above. Before conducting the installation and setup work , purchase the speci ed hub model at a personal computer store. (The hub is not necessary when the machine is used for standalone operation.) We cannot guarantee proper linked game play operation if a hub other than the one speci ed below is used.

[SPEC]

Access Method	10/100Mbps(CSMA/CD)
Supported Standards	IEEE802.3u(100Mbps, Auto negotiation)
	IEEE802.3x(Flow control)
Transfer Mode	Store-and-forward
Packet Bu er Memory	256KB or higher recommended
MAC Address	more than 1024 entries
Other	Auto MDI/MDI-X recommended

(2) Connection method

1 Connect two of the provided communication cables .

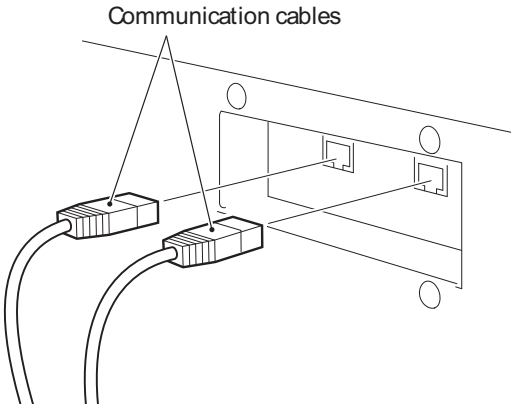

5-3-7 Assembling and installing the POP

(1) Game play instructions POP (EXP),USP POP (EXP), awareness raising POP

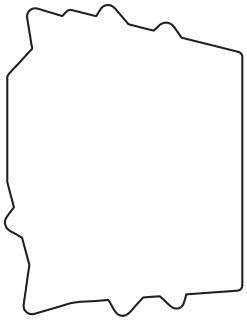

USP POP (EXP)

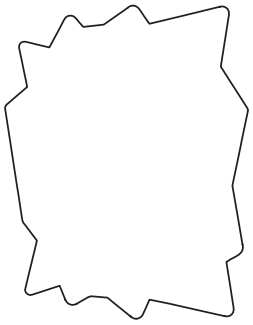

Awareness raising POP (Exp)

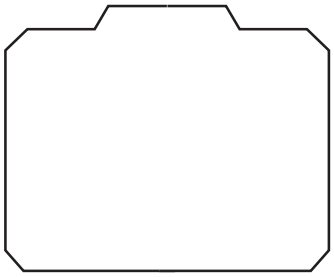

Game play instructions POP (EXP)

1 Attach the explanation panels (L) (EXP), (R) (EXP) on the control panel at the locations indicated below.

RULES
KEEP
FIRING!

5-4 Removing and installing the maintenance door
- To be conducted by a technician only -

1 Remove the two Torx bolts (M5 x 8).

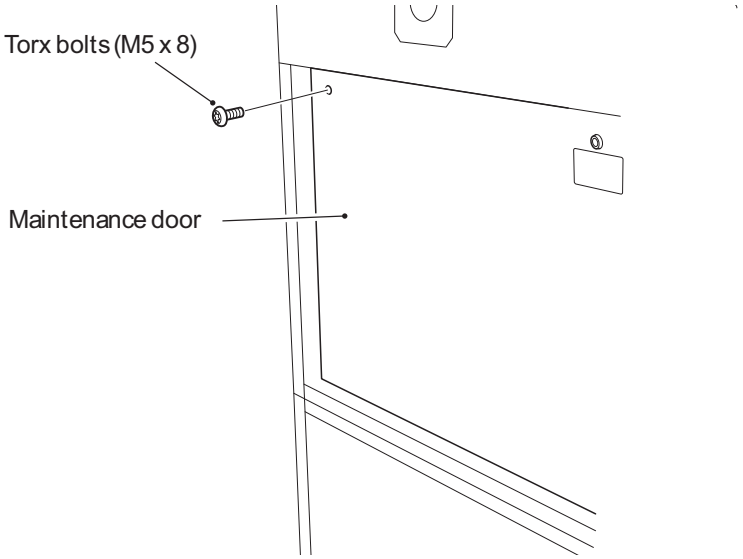

2 Unlock the maintenance door lock by using the provided maintenance key, and open the maintenance door.

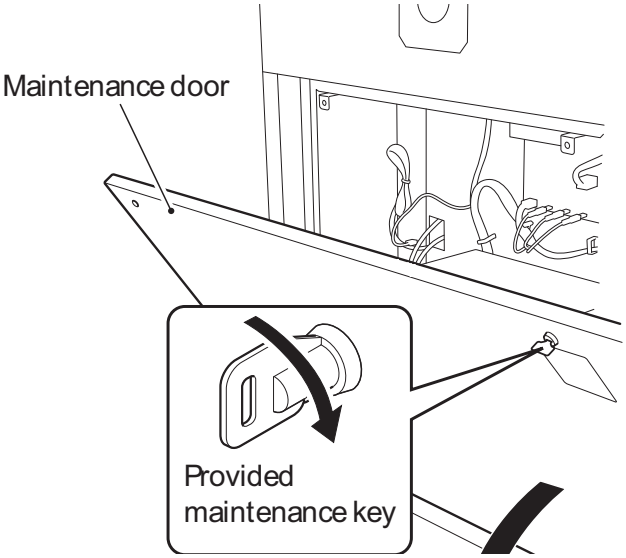

3 To reinstall, follow the removal sequence in reverse.

5-5 Connecting the power cord and ground lead

⚠WARNING

- Connect the ground lead using one of the following methods. If the machine is not grounded properly, electric shock can occur in case of electrical leakage.
  1. Use the 3P plug for grounding the machine.
  2. (If the 3P plug cannot be used)
     Connect the ground lead to the ground terminal of the machine for grounding the machine.

1 Insert the connector of the power cord to the power input section located on the lower back side of the Front Assy.

2 Connect the power cords of the main unit and Compressor Assy to AC outlets.

NOTES

5-6 Turning on the power switch

1 Turn on the power switch on the main unit.

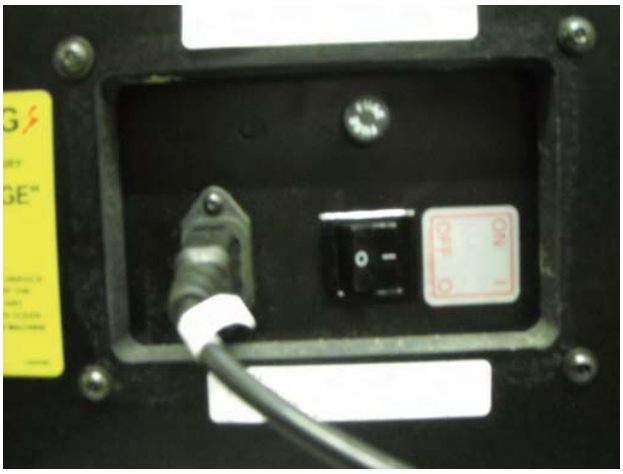

3 Turn on the power switch on the Compressor Assy.

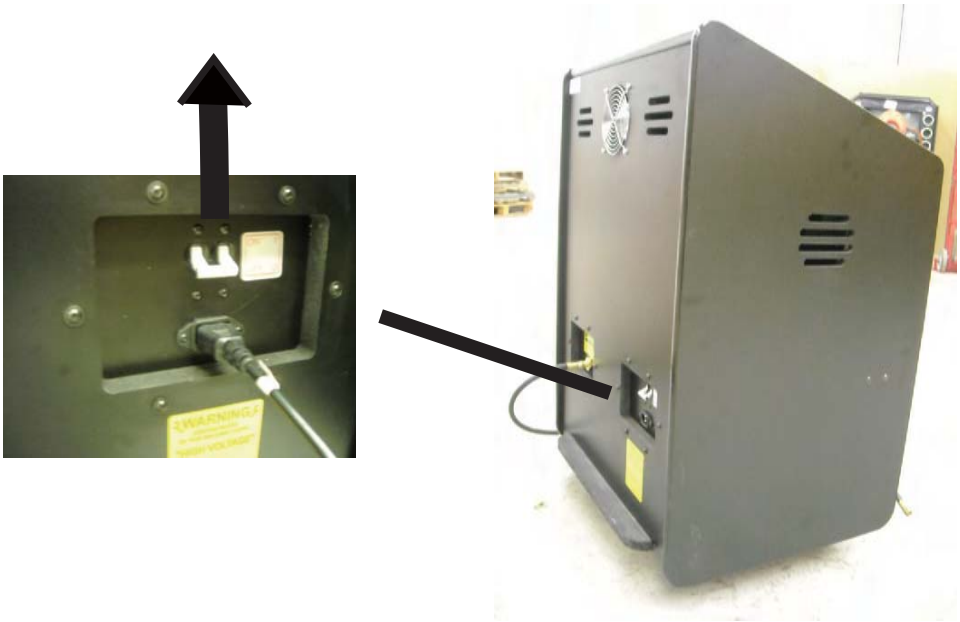

NOTICE

- Do not repeat turning the power switch ON/OFF unnecessarily. Repeated ON/OFF operations can cause damage to the contents of the backup memory.
- When turning the power switch ON/OFF, wait at least 30 seconds between switch operations.

5-7 Setting the communication parameters

After connecting the communication cables, set the communication parameters for each seat.

5-7-1 Setting the Seat ID

1. Turn on the power switch. (See "5-6 Turning on the power switch.")
2. Set the Test switch on the service panel to ON to display the Menu screen. (See "7-3-1 Adjustment switches.")
3. Using the Select switch, select "NETWORK OPTIONS" and press the Enter switch to display the Network Options screen.
4. Using the Select switch, select "SEAT ID" and press the Enter switch to select an item.
5. Using the Select switch, change the Seat ID. Set the IDs in sequence so that the leftmost seat is designated No. 1.

   1 (Main): Functions as the main unit. If "main machine" is not set, the communication function does not work.

   2 to 4: Set the numbers in sequence from the left, making sure that the same number is not assigned twice.

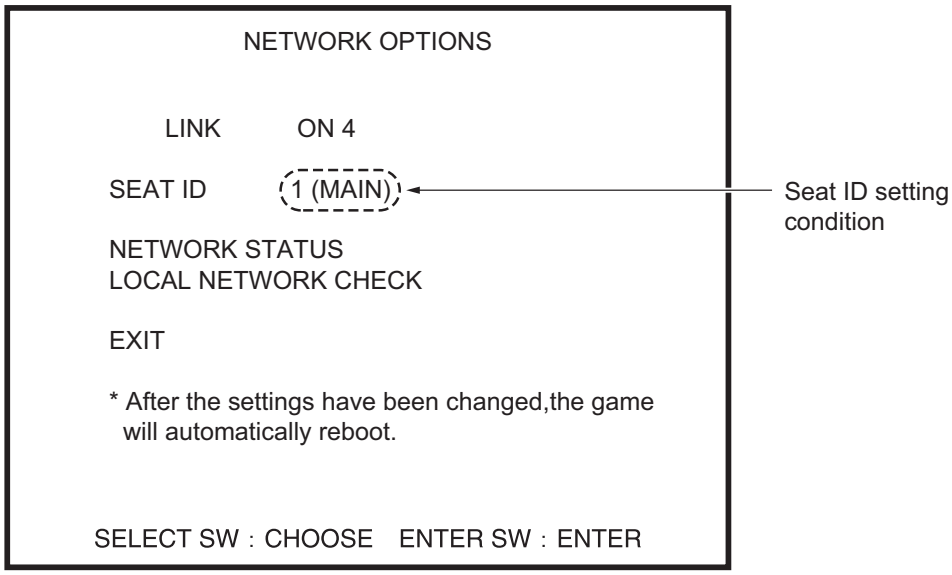

Network Options screen

6. After the setting has been changed, the machine automatically restarts when it exits from the Test mode.

5-8 Confirmation of settings after first startup

5-8-1 Setting parameters according to operation conditions

Set the following parameters according to the specific operating conditions at the arcade.

- Game fee setting
  (See "7-4-2 Game fee/free play setting (COIN OPTIONS)."
- Sound level setting
  (See "7-4-6 Sound test (SOUND TEST)."

5-8-2 Initializing the volumes

Initialize the steering pedal by referring to "7-4-4 (b) I/F INITIALIZE" on page 61.

5-9 Confirmation after installation and setup

- Is the machine installed properly according to the specified installation conditions? (See "5-1 Installation conditions."")
- Is the power supply capacity sufficient for the main unit Assys and Compressor Assy? (See "2. SPECIFICATIONS.")
- Are the communication cables and power cable covered with a cable protector to prevent players and other customers from tripping over the cables?

6. MOVING AND TRANSPORTING

⚠WARNING

- Do not leave the machine on a slope. If the machine is left on a slope, it may tip over and cause an unexpected accident.

6-1 Moving (on the floor)

NOTICE

- When moving the machine, be sure to separate the machine into the Front Assy, Ride (L), (R) Assys and Compressor Assy (See "5-3-4 Connecting the Ride (L), (R) Assys" and "5-3-5 Installing the Compressor Assy.")
- Carefully transport the machine in order to prevent damage to the machine.
- The overall height of the machine is approximately 90" . (with the Signboard attached) Check the heights of the doors and other openings in the carry-in passage. If necessary, dismount the Signboard Assy and Monitor (L), (R) Assys (See "5-2-1 Separating the Monitor (L), (R) Assys from the Monitor Base Assy.") (See "5-3-1 Installing the Signboard ")
- Do not apply excessive force to plastic parts since they can beak easily.
- Even when moving the machine for a short distance, be sure to raise the level adjusters all the way. (See "5-3-2 Adjusting the level adjusters on the Front Assy" and "5-3-4 Connecting the Ride (L), (R) Assys.")
- Be sure to turn off the power switch before moving the machine.
- Carefully handle the communication cables and power cord. Exercise caution when unplugging and plugging the communication cables. (See "5-3-6 Connecting the communication cables.")

6-2 Transportation

6-2-1 Manual transportation (carrying on stairs, etc.)

⚠WARNING

- When carrying the machine manually, be sure to divide the machine into the Signboard , Ride (L), (R) Assys, Compressor Assy, Monitor (L), (R) Assys and Monitor Base Assy, and raise all the level adjusters all the way. (See "5-3-1 Installing the Signboard Assy," "5-3-4 Connecting the Ride (L), (R) Assys," "5-3-5 Installing the Compressor Assy" and "5-3-2 Adjusting the level adjusters on the Front Assy.") Attempting to carry the machine manually (over stairs, etc.) without dividing into components can result in an unexpected accident.
- When carrying the machine manually, make sure that the following number of persons are available. Attempting to carry the machine with fewer persons can result in an accident or injury.
  - Front Assy (approx. 270 kg): 10persons or more
  - Ride Assy (approx. 160 kg): 7 persons or more
  - Signboard Assy (approx. 5kg): 2 persons or more
  - Compressor Assy (approx. 80 kg): 4 persons or more

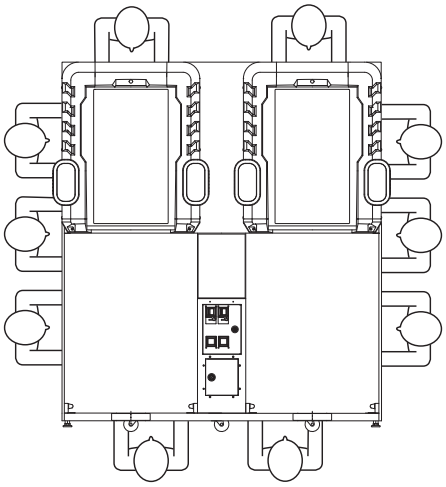

Monitor Assy

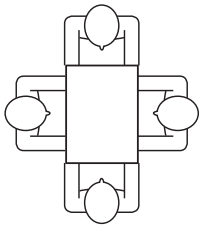

Compressor Assy

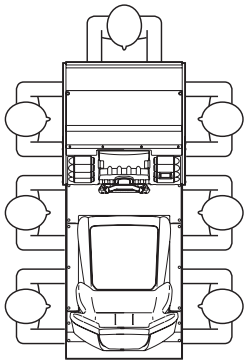

Ride Assy

Signboard

NOTICE

- Do not apply impact to the machine when lowering the machine.

6-2-2 Loading to/unloading from a vehicle

⚠WARNING

- When carrying the machine manually, be sure to divide the machine into the Signboard Assy, Ride (L), (R) Assys, Compressor Assy, Monitor (L), (R) Assys and Monitor Base Assy, and raise all the level adjusters all the way. (See "5-3-1 Installing the Signboard ," "5-3-4 Connecting the Ride (L), (R) Assys," "5-3-5 Installing the Compressor Assy" and "5-3-2 Adjusting the level adjusters on the Front Assy.") Attempting to carry the machine manually (over stairs, etc.) without dividing into components can result in an unexpected accident.
- When using a forklift to transport the machine, observe the following instructions. If the instructions are not followed, the machine can tip over and cause an unexpected accident.
  - Mount the transport fixture to the Front Assy. (See "5-3-3 Installing the adjuster holders.")
  - Insert the forks into the specified positions.
  - Pay close attention to the balance of the machine.

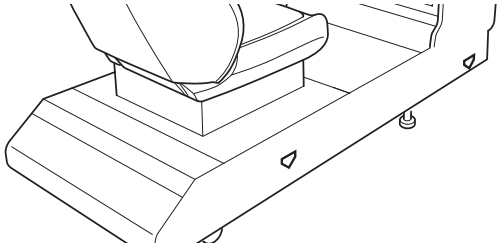

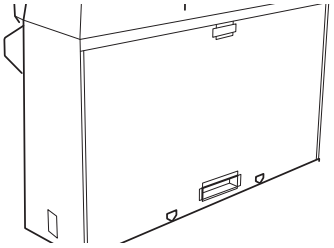

- When carrying the machine manually, make sure that the following number of persons are available. Attempting to carry the machine with fewer persons can result in an accident or injury.
  - Front Assy (approx. 270 kg): 10 persons or more
  - Ride Assy (approx. 160 kg): 7 persons or more
  - Signboard Assy (approx. 18 kg): 2 persons or more
  - Compressor Assy (approx. 80 kg): 4 persons or more

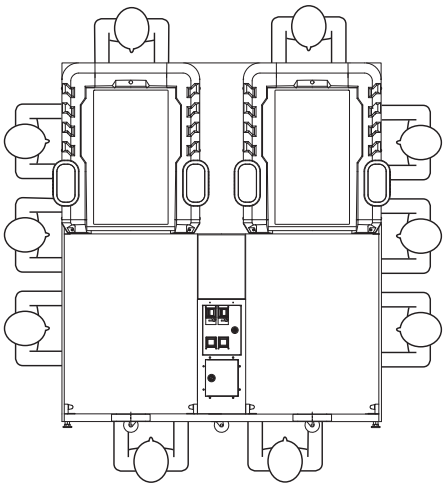

Monitor Assy

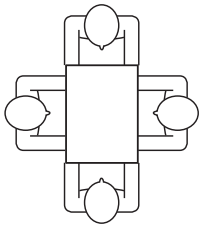

Compressor Assy

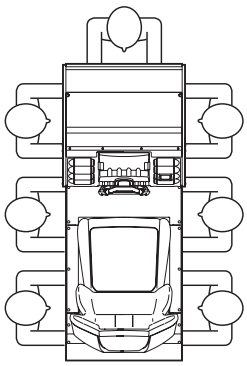

Ride Assy

Signboard

NOTICE

- Do not apply impact to the machine when lowering the machine.

6-2-3 Trucking

⚠WARNING

- When transporting the machine on a vehicle, secure the machine to the vehicle in order to prevent it from moving due to acceleration or deceleration of the vehicle. Failure to tie the machine securely to the vehicle may result in an accident.

NOTICE

- Do not apply impact to the machine when lowering the machine.
- When securing the machine in place by using ropes, observe the following.
  - Position the rope or belt at the locations shown in the diagram below.
  - To protect the surface of the machine, place padding material such as blankets between the machine and rope/belt.
- To protect the surface of the machine, place polystyrene foam or other cushioning material between the machine and cargo bed and between the machine and adjacent equipment.
- When transporting the machine in rain, use a covered vehicle or a container to keep the machine from becoming wet.

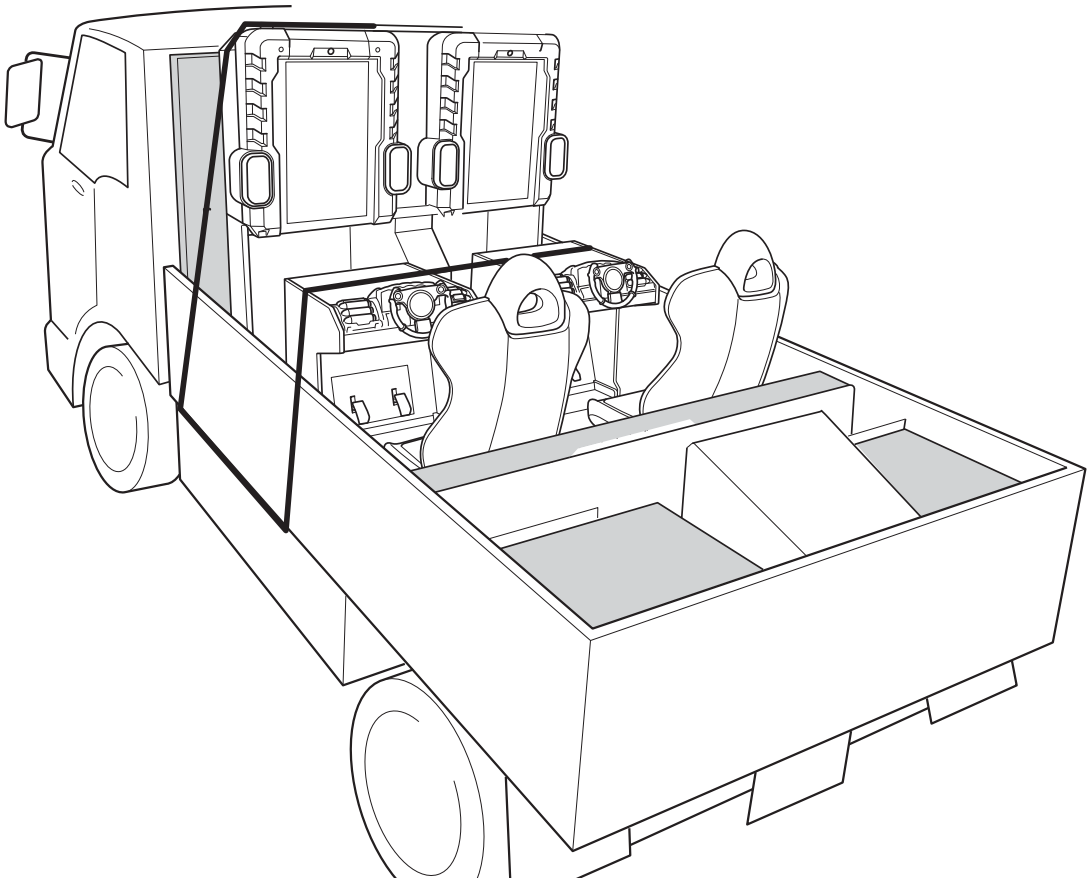

7. OPERATION

⚠WARNING

- Should any abnormality occur, turn off the power switch immediately to stop operating the machine. Then, unplug the power cord plug from the AC outlet. Operating the machine without correcting abnormalities can result in a fire or accident.
- Dust accumulated on the power cord plug may cause a fire. Check the power cord plug regularly and remove dust.
- Insert the power cord plug firmly into the AC outlet. Poor contact may cause overheating that can lead to a fire or burns.
- Be sure to check that the machine has been installed according to the instructions and procedures specified in this operation manual (see "5. INSTALLATION") before operating the machine. If the machine is not installed properly, fire, electric shock or equipment malfunction can occur.
- The warning labels describe important safety precautions. Be sure to observe the following:
  - To ensure that the warning labels attached to the machine are easily legible, install the machine at a proper location with ample illumination and keep the labels clean at all times. Also, make sure that the labels are not hidden behind another game machine or other objects.
  - Do not remove or alter the warning labels.
  - If the warning labels become excessively dirty or damaged, replace them with new labels. To order warning labels, contact your distributor.
- To ensure safe operation of the machine, be sure to conduct the pre-service check (see "7-1 Pre-service check") and maintenance (see "8. MAINTENANCE") described in this manual. Failure to perform the specified inspections and maintenance can result in unexpected accidents.

NOTICE

- To ensure proper communication, turn on all connected units within one minute.
  The communication condition can be checked with the indication "○ persons can play the versus game" (○ indicates the number of communicating units) that appears at the center of the title screen. (See "5-7 Setting the communication parameters.")
- When turning off the power switch, wait until the game play ends in all other connected units. Turning off the switch of a machine may affect the game being played with other connected units.

7-1 Pre-service check

Check the items described in the following page before commencing operation. If any problem is found, take corrective measures by referring to "8-2 Troubleshooting"

⚠WARNING

- To prevent accidents and injury, be sure to conduct the pre-service check described in "7-1-1 Safety check" before commencing operation.
- Operating the machine with damaged, broken or deteriorated parts, or with incorrectly installed parts can cause injury to players or people near the machine. If an abnormality is found, replace defective parts immediately.
  To order parts, contact your distributor.

7-1-1 Safety check (before power ON)

(1) Are all warning indications in place? (See"1-4 Description of warning labels attached to the machine.")
(2) Are the warning indications legible? (See "1-4 Description of warning labels attached to the machine.")
(3) Are all level adjusters adjusted properly? (See "5-3-2 Adjusting the level adjusters" and "5-3-4 Connecting the Ride (L), (R) Assys.")
(4) Is the specified play zone provided? (See "5-1-2 Play zone of installed machine.")
(5) Are the power cord and communication cables routed so that they will not cause customers to trip over?

Check the following items after turning on the power switch. If an abnormality is found, turn off the power switch immediately to stop operating the machine. Then, unplug the power cord from the AC outlet and contact your distributor.

(6) Is any part of the power cord or plug abnormally hot?
(7) Does touching the machine give an electric shock?
(8) Is there a burning smell, abnormal noise or vibration?
(9) Is there any other sign of abnormality or malfunction?

7-1-2 Operation check (after power ON)

(1) Check the sound. (Is sound produced by each speaker?)
(See "7-4-6 Sound test (SOUND TEST).")
(2) Check the lamps. (Do the fluorescent lamps, Fire buttons, and Vibration Stop button light?)
(See "7-4-4 (d) Input/ LAMP TEST.")
(3) Check the displayed image. (Does the monitor show images properly?)
(See "7-4-5 Monitor test (MONITOR TEST).")

• To check the following items, press the Service switch and play the game. (See "7-3-1 Adjustment switches.")

(4) Check the steering operation. (Does turning of the steering wheel change the direction of the tank?)
(5) Check the pedal operations. (Does depressing the right pedal move the tank forward? Does depressing the left pedal moves the tank backward?)
(6) Check the communication condition. (Does the communication function of each seat work properly?)
(7) Check the Fire button operation and vibration operation.. (Do both right and left buttons fire the weapon? Do the steering wheel and seat vibrate during firing?)
(8) Check the Vibration Stop button operation. (Does pressing the Vibration Stop button stops vibration?)

7-2 How to play

This game machine provides an exciting experience of operating a tank and destroying enemies and buildings. Players can enjoy battling against huge enemies or against each other, without worrying about differences in game playing skills.

⚠ A I N

- If people are conducting the following actions, warn them of potential danger.
  - Two people are in the seat and playing the game.
  - A person other than the player is operating the steering wheel.
- If a player becomes sick due to game images or stimulation by lights, have the person stop playing the game immediately and let him/her rest.
- In rare cases, stimulation by lights or video images can cause convulsions or a loss of consciousness. If this happens, advice the person to see a doctor for medical examination as soon as possible. When pre-school children play, request their parents or guardians to observe the children.

7-2-1 About the game mode

There are three modes to choose from: "Battle against huge enemies,""Battle against each other" and "Battle in teams."
When the "Battle against huge enemies" mode is selected, the game consists of two missions. Players can make a sally repeatedly during the combat time so that all players can enjoy the game together until the game time ends. If the two missions are cleared with high scores, a special mission will be activated.
In the ""Battle against each other" and "Battle in teams" modes, players can also make a sally repeatedly during the battle time. Players compete with the number of destroyed tanks.

7-2-2 About the camera

The camera captures the facial image of the player. The player's face appears on the screen during the game.

7-2-3 About the operation and vibration

The game can be played easily by using the steering wheel and pedals. The tank turns to the right or left by rotating the steering wheel. The right pedal moves the tank forward, and the left pedal moved the tank backward. The Fire button on the steering wheel is used to fire the weapon. The right and left Fire buttons are the same in function. The seat and steering wheel vibrate dynamically to give a realistic weapon firing feel. When an item is obtained during the game, the weapon on the tank changes. Various weapons are available, and they give different firing experiences.
The vibration can be stopped by pressing the Vibration Stop button

7-3 Adjustment

7-3-1 Adjustment switches

Open the service door to locate the adjustment switches.

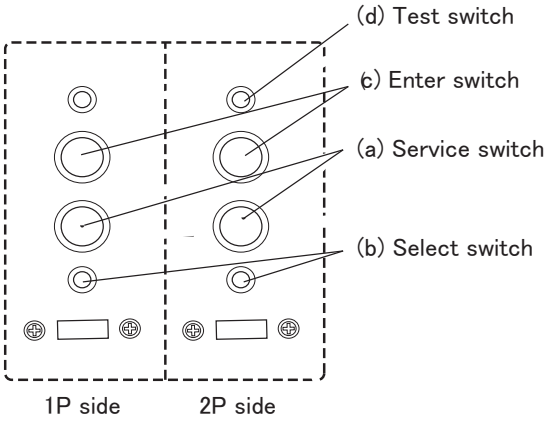

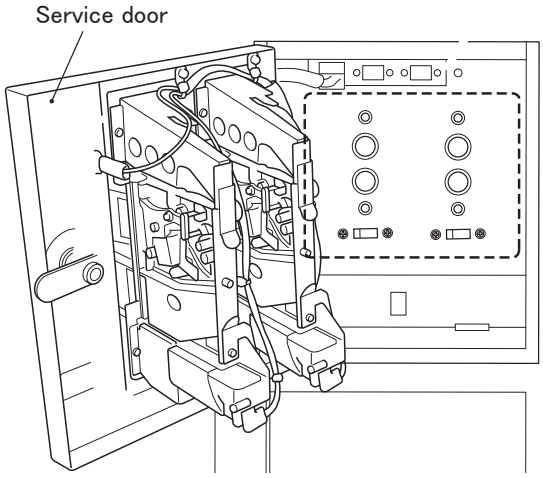

(a) Service switch (red)
Press this switch to increase the credit count without activating the coin counter.

(b) Select switch
In the Test mode, flip this switch up or down to select an item or content (numeric value).

(c) Test switch
Press this switch to activate the Test mode.
The Test mode is used to test the monitors and others.
(See "7-4 Test mode.")

(d) Enter switch (green)
After selecting an item or content (numeric value) with the Select switch, press this switch to finalize or execute the selection.

The buttons on the steering wheel also provide the same functions as the Select and Enter switches.

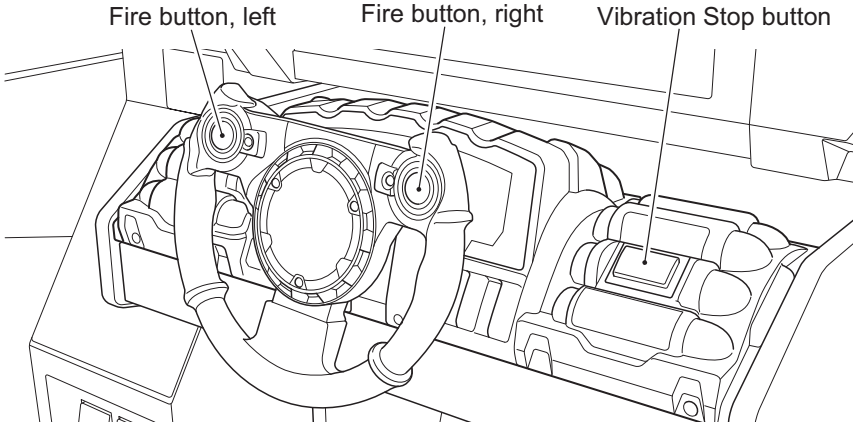

Vibration Stop button = Enter switch
Fire button, Left + Vibration Stop button = Select switch (down)
Fire button, Right + Vibration Stop button = Select switch (up)

7-4 Test mode

7-4-1 Description of the Menu screen

1. Unlock the service door with the provided key, and set the Test switch to ON.
   The Menu screen appears on the monitor.
2. Flip the Select switch up or down and select an item. The selected item is indicated by flashing.
3. Press the Enter switch to enter the selection.
4. When the selection is entered, the screen shows the applicable setting items.
5. After all adjustments are completed, set the Test switch to OFF.

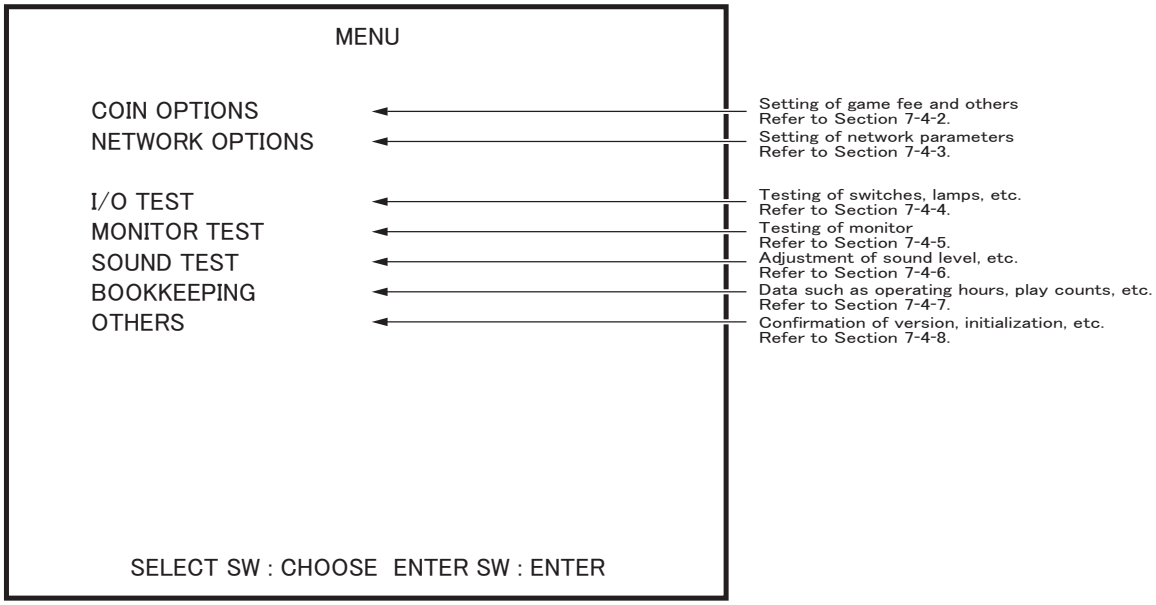

Menu screen

7-4-2 Game fee/free play setting (COIN OPTIONS)

This screen is used to change fee-related settings such as game fee and free play.

1. Select "COIN OPTIONS" in the Menu screen and press the Enter switch. The Coin Options screen appears on the screen.
2. Flip the Select switch up or down and select an item. The selected item is indicated by flashing.

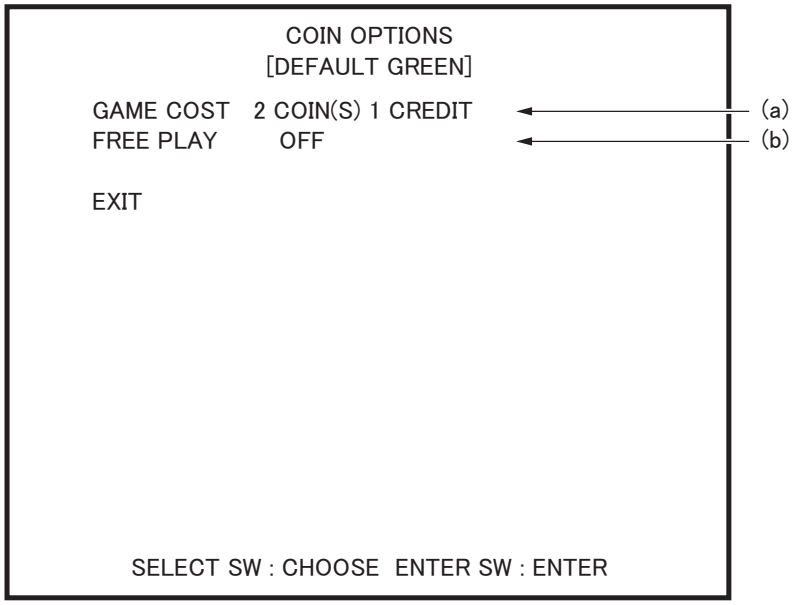

Coin Options screen

Item	Description
(a) GAME COST	Set the number of coins required to play the game. (default: 2) [1 to 19]
(b) FREE PLAY	Set free play (default: OFF)

3. Press the Enter switch to enter the selection.
4. After an item is selected, change the setting by using the Select switch.
5. After the setting has been changed, press the Enter switch to return to the item selection screen.
6. Select "EXIT" and press the Enter switch to return to the Menu screen.

7-4-3 Network setting (NETWORK OPTIONS)

This screen is used to set network parameters.

1. Select "NETWORK OPTIONS" in the Menu screen and press the Enter switch. The Network Options screen appears on the monitor.
2. Flip the Select switch up or down and select an item. The selected item is indicated by flashing.

```
                    NETWORK OPTIONS

        LINK        ON 4

    SEAT ID         1 (MAIN)

    NETWORK STATUS
    LOCAL NETWORK CHECK

    EXIT

    * After the settings have been changed,the game
      will automatically reboot.



        SELECT SW : CHOOSE  ENTER SW : ENTER
```

Network Options screen

Item	Description
LINK	Confirm the communication status. LINK: ON 4 Four units are communicating in good condition. LINK: ON 3 Three units are communicating in good condition. LINK: ON 2 Two units are communicating in proper condition. LINK: OFF The unit is not communicating with any other unit.
SEAT ID	Set the ID used for the recognition of each seat. Set the IDs in sequence so that the leftmost seat is designated No. 1. [1 to 4] After this item has been changed, the machine automatically restarts when it exits from the Test mode.

3. Press the Enter switch to enter the selection. When the selection is entered, the screen shows the applicable setting items.
4. Select "EXIT" and press the Enter switch to return to the Menu screen.

7-4-4 Switch input/output tests (I/O TEST)

This screen is used to test the switches.

1. Select "I/O TEST" in the Menu screen and press the Enter switch. The I/O Test screen appears on the monitor.
2. Flip the Select switch up or down and select the item to be changed.

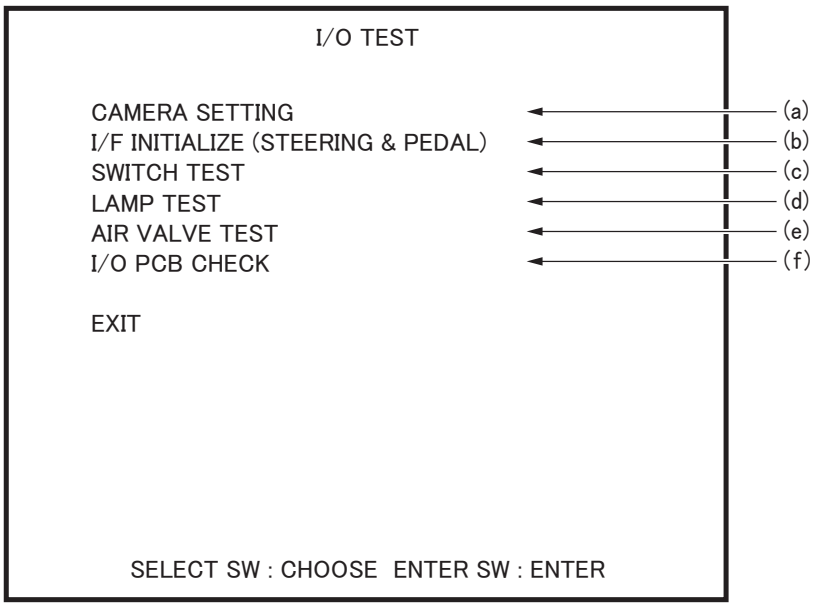

I/O Test screen

Item	Description
(a) CAMERA SETTING	Adjusts the camera position.
(b) I/F INITIALIZE (STEERING & PEDAL)	Initializes the operating sections (steering wheel, pedals).
(c) SWITCH TEST	Executes the switch test.
(d) LAMP TEST	Executes the lamp test.
(e) AIR VALVE TEST	Executes the air valve test.
(f) I/O PCB CHECK	Confirm the operating status of the NA-JV PC Board (I/O PCB).

3. Press the Enter switch to enter the selection.
4. When the selection is entered, the screen shows the applicable setting items.
5. After the setting has been changed, press the Enter switch to return to the item selection screen.

(a) CAMERA SETTING

This screen is used to adjust the camera position.

1 Select "CAMERA SETTING" in the I/O Test screen and press the Enter switch.
The Camera Setting screen appears on the monitor.

2 Flip the Select switch up or down and select an item. The selected item is indicated by flashing.

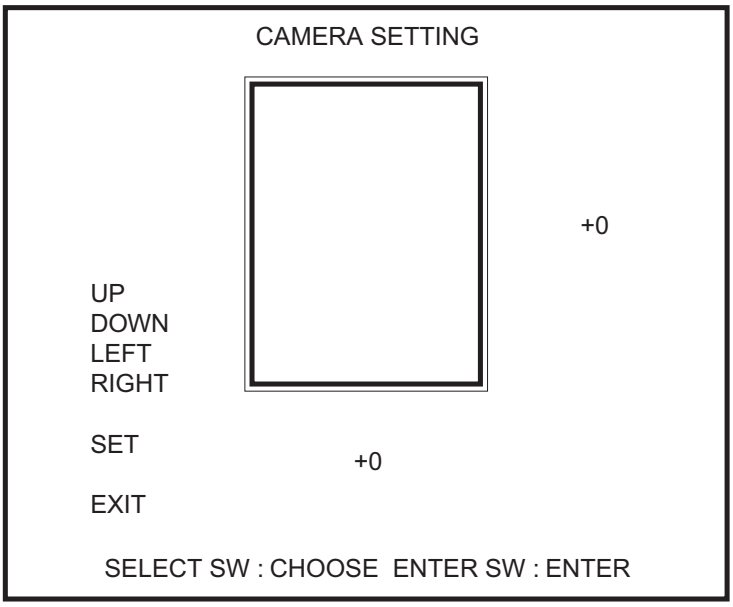

Camera Setting screen

Item	Description
UP	Adjusts the position of camera image in the vertical position.
DOWN	
LEFT	Adjusts the position of camera image in the horizontal position.
RIGHT	
SET	Captures the image prior to storing the setting. (CANCEL: Returns to the previous screen without storing the change; SAVE SETTING: Saves the change and returns to the previous screen)

3 Pressing the Enter switch changes the numeric value according to the selected item and moves the camera image a little at a time.

4 To save the change, select "SET" and press the Enter switch. Then, select "SAVE SETTING" and press the Enter switch.

5 Select "EXIT" and press the Enter switch to return to the I/O Test screen.

(b) I/F INITIALIZE

This screen is used to initialize the operating sections (steering wheel and pedals).

1 Select "I/F INITIALIZE (STEERING & PEDAL)" in the I/O Test screen and press the Enter switch.

The I/F Initialize (Steering & Pedal) screen appears on the monitor.

```
I/F INITIALIZE (STEERING & PEDAL)

        STEERING    0500
        PEDAL(L)    0000
        PEDAL(R)    0000

[STEP 1] Turn the wheelto the maximum left and right
         values.
[STEP 2] Push both pedals in as far as they will go.
[STEP 3] Release your hands and feetfrom the controls
         and wait a moment.
[STEP 4] Select SAVE SETTINGand complete the
         initialization.
[STEP 5] As the next screen confirm the conditionof the
         wheel and pedals.

CANCEL
SAVE SETTING

SELECT SW : CHOOSE  ENTER SW : ENTER
```

I/F Initialize (Steering & Pedal) screen

2 Turn the steering wheel all the way to the left and then to the right, and depress the right and left pedals fully. Then, release your hands and feet from the steering wheel and pedals, select "SAVE SETTING" and press the Enter switch to start the initialization process.

After the initialization ends, the screen automatically changes to the Switch Test screen.

On the Switch Test screen, make sure that the steering wheel and pedals have been initialized properly.

3 Select "CANCEL" and press the Enter switch to return to the I/O Test screen.

(c) SWITCH TEST

This screen is used to test the switches.

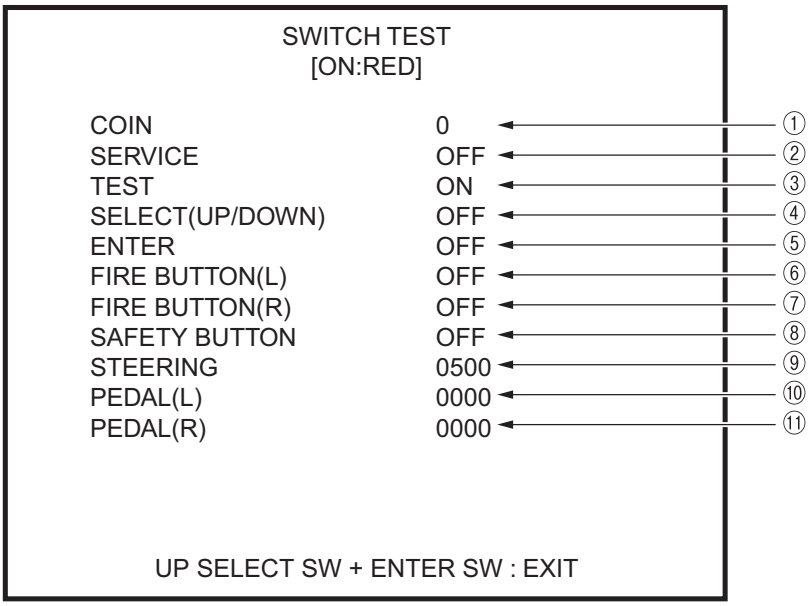

Switch Test screen

Item	Description
COIN	The counter counts up each time a coin is inserted.
SERVICE	Shows "ON" while the Service switch is held pressed.
TEST	Shows "ON" when the Test switch is turned on. (Since the machine is in the Test mode, this indication always shows "ON.")
SELECT(UP/DONW)	Shows "UP" when the Select switch is flipped up, and shows "DOWN" when the Select switch is flipped down.
ENTER	Shows "ON" while the Enter switch is pressed.
FIRE BUTTON(L)	Shows "ON" while the left Fire button on the steering wheel is pressed.
FIRE BUTTON(R)	Shows "ON" while the right Fire button on the steering wheel is pressed.
SAFETY BUTTON	Shows "ON" while the Vibration Stop button on the control panel next to the steering wheel is pressed.
STEERING	The numeric value changes when the steering wheel is turned. The steering wheel is operating properly when it shows "1000 RIGHT OK" with the steering wheel turned all the way to the right and shows "10000 LEFT OK" with the steering wheel turned all the way to the left.
PEDAL(L)	The numeric value changes when the left pedal is depressed. The pedal is operating properly when it shows "1000 OK" with the left pedal depressed fully.
PEDAL(R)	The numeric value changes when the right pedal is depressed. The pedal is operating properly when it shows "1000 OK" with the right pedal depressed fully.

To return to the I/O Test screen, hold the Select switch in the Up position and press the Enter switch.

(d) LAMP TEST

This screen is used to test the lamps.

1 Select "LAMP TEST" in the I/O Test screen and press the Enter switch. The Lamp Test screen appears on the monitor.

2 Flip the Select switch up or down and select an item. The selected item is indicated by flashing.

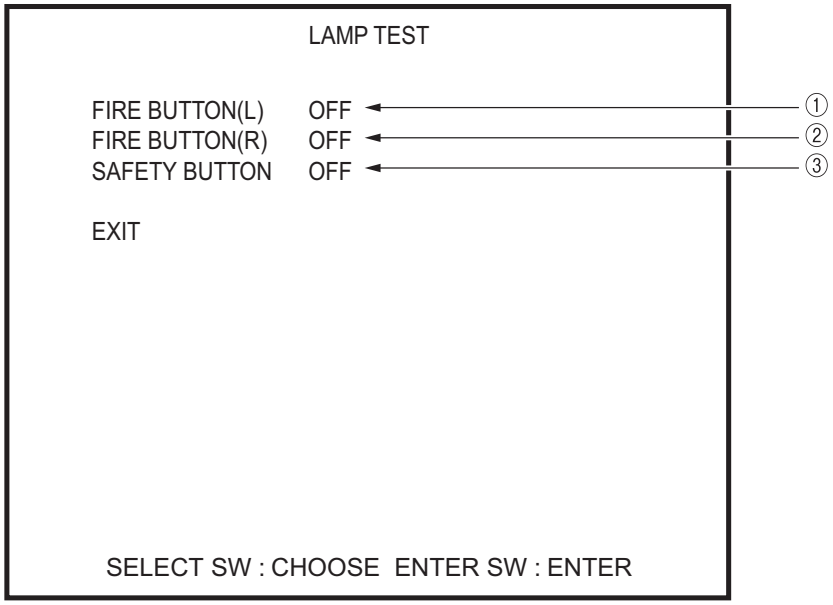

Lamp Test screen

Item	Description
☒ FIRE BUTTON(L)	The left Fire button lights while it is ON.
☒ FIRE BUTTON(R)	The right Fire button lights while it is ON.
☒ SAFETY BUTTON	The Vibration Stop button lights while it is ON.

3 Press the Enter switch, select an item, and switch the ON/OFF condition by using the Select switch. When the indication shows "ON," the corresponding lamp lights.

4 Press the Enter switch again for the selection of the next item.

5 Select "EXIT" and press the Enter switch to return to the I/O Test screen.

(e) AIR VALVE TEST

This screen is used to text the pneumatic vibration function.

1 Select "AIR VALVE TEST" in the I/O Test screen and press the Enter switch. The Air Valve Test screen appears.

2 Flip the Select switch up or down and select an item. The selected item is indicated by flashing.

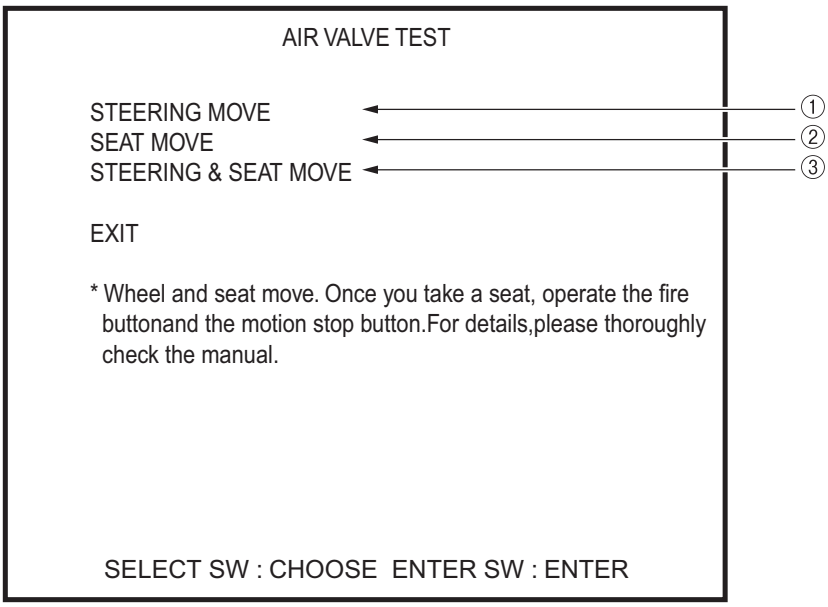

Air Valve Test screen

Item	Description
☒ STEERING MOVE	The steering section moves.
☒ SEAT MOVE	The seat section moves.
☒ STEERING & SEAT MOVE	Both the steering section and seat section move.

3 Pressing the Enter switch moves the steering section and/or seat section according to the selected item.

4 Select "EXIT" and press the Enter switch to return to the I/O Test screen.

NOTICE

- In this test, the steering section and seat section move. When you are sitting in the seat, use the Fire button and Vibration Stop button to activate the vibration operation. (See "7-3-1 Adjustment switch-

(f) I/O PCB CHECK

This screen is used to confirm the condition of the NA-JV3 PC Board (I/O PCB).

```
                    I/O PCB CHECK

  I/O PCB : Connect OK

  Namco ltd.;NA-JV;Ver3.03;JPN,Multi purpose
                    with PPG

EXIT

SELECT SW : CHOOSE  ENTER SW : ENTER
```

I/O PCB Check screen

Item	Description
(a) I/O PCB	Shows "CONNECT OK" when the PCB is normal.

Select "EXIT" and press the Enter switch to return to the I/O Test screen.

7-4-5 Monitor test (MONITOR TEST)

This screen is used to adjust the monitor.

1. Select "MONITOR TEST" in the Menu screen and press the Enter switch. The Monitor Test screen appears on the monitor.
2. Flip the Select switch up or down to select the item to be changed.
   The selected item flashes.

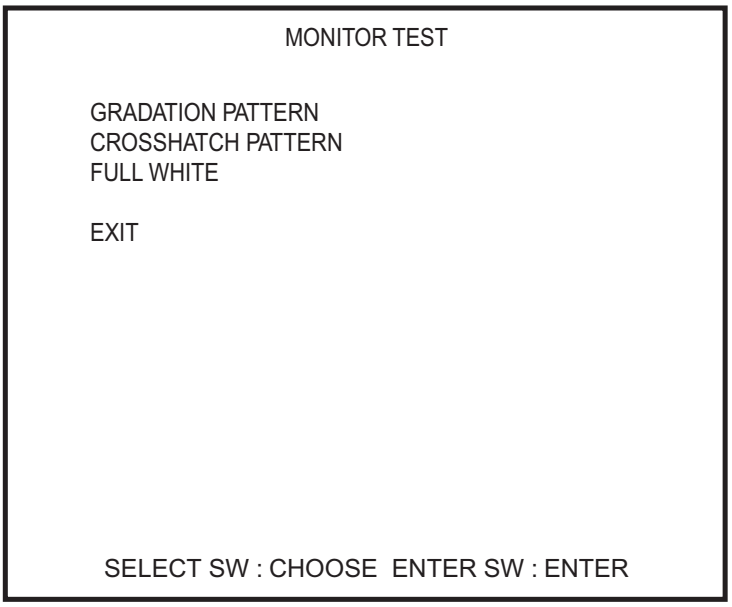

Monitor Test screen

Item	Description
GRADATION PATTERN	Displays a 16-step gradation pattern.
CROSSHATCH PATTERN	Displays a crosshatch pattern for confirmation of image position.
FULL WHITE	Displays all-white screen.

3. Press the Enter switch to display the selected test screen.
4. Press the Enter switch again to return to the Monitor Test screen.
5. Select "EXIT" and press the Enter switch to return to the Menu screen.

7-4-6 Sound test (SOUND TEST)

This screen is used to set the sound level and right/left output level and also to conduct sound test (stereo check).

1. Select "SOUND TEST" in the Menu screen and press the Enter switch. The Sound Test screen appears on the screen.
2. Flip the Select switch up or down to select the item to be changed.

   The selected item flashes.

```
                SOUND TEST
            [DEFAULT IN GREEN]

VOLUME  GAME      (0~11)   10          <---- (a)
        ATTRACT   (0~11)   10
OUTPUT LEVEL FRONT         100%        <---- (b)
             SEAT          100%
             BOTTOM        100%

SOUND TEST FRONT           OFF         <---- (c)
           SEAT            OFF
           BOTTOM          OFF

EXIT


 SELECT SW : CHOOSE  ENTER SW : ENTER
```

Sound Test screen

Item	Description
(a) VOLUME GAME	GAME: Set the general sound level during the Game mode. (Default: 10)
	ATTRACT: Set the general sound level during the Attract mode. (Default: 10)
(b) OUTPUT LEVEL	FRONT: Adjust the sound level of the front right and left speakers. (Default: 100%)
	SEAT: Adjust the sound level of the seat speaker. (Default: 100%)
	BOTTOM: Adjust the sound level of the seating surface speaker. (Default: 100%)
(c) SOUND TEST	FRONT: The front right and left speakers produce a test sound.
	SEAT: The seat speaker produces a test sound.
	BOTTOM: The seating surface speaker produces a test sound.

3. Press the Enter switch to enter the selection.
4. After an item is selected, change the setting by using the Select switch.
5. After the setting has been changed, press the Enter switch to return to the item selection screen.

7-4-7 Game data display/initialization (BOOKKEEPING)

This screen is used to display game data such as the operating hours and play counts.

1. Select "BOOKKEEPING" in the Menu screen and press the Enter switch. The Bookkeeping screen appears on the monitor.
2. Flip the Select switch up or down and select an item. The selected item is indicated by flashing.

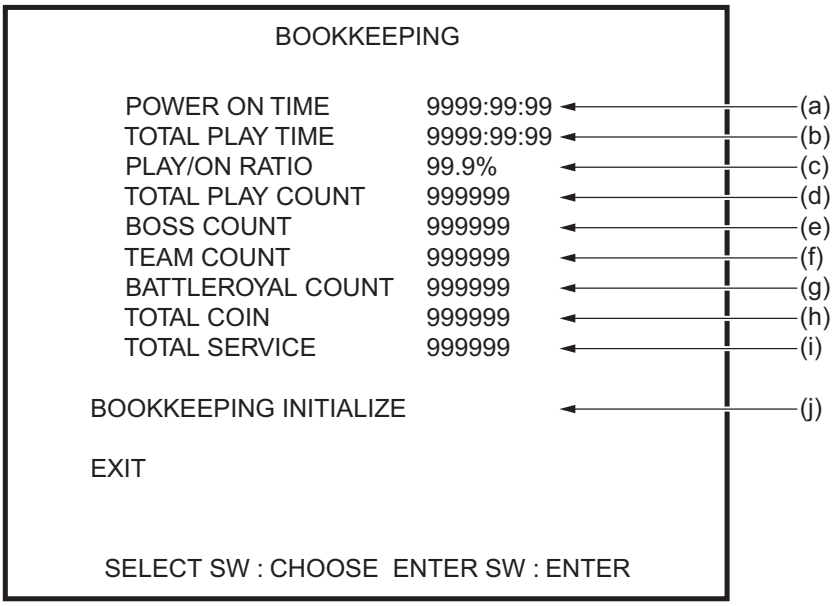

Bookkeeping screen

Item	Description
(a) POWER ON TIME	Shows the cumulative power ON time.
(b) TOTAL PLAY TIME	Shows the cumulative play time.
(c) PLAY/ON RATIO	Shows the operating rate [Total play time/Power ON time]
(d) TOTAL PLAY COUNT	Shows the total number of game plays.
(e) BOSS COUNT	Shows the number of game plays in "Battle against huge enemies" mode.
(f) TEAM COUNT	Shows the number of game plays in "Battle in teams" mode.
(g) BATTLEROYAL COUNT	Shows the number of game plays in "Battle against each other" mode.
(h) TOTAL COIN	Shows the total number of coins inserted.
(i) TOTAL SERVICE	Shows the total number of service activations.
(j) BOOK KEEPING INITIALIZE	Initializes the bookkeeping data.

3. Select "BOOKKEEPING INITIALIZE" and press the Enter switch. The screen displays "YES" and "NO." To clear data and execute initialization. select "YES" and press the Enter switch.
4. Select "EXIT" and press the Enter switch to return to the Menu screen.

7-4-8 Initialization, etc. (OTHERS)

This screen is used to initialize the bookkeeping data (BOOKKEEPING) and others.

1. Select "OTHERS" in the Menu screen and press the Enter switch. The Others screen appears on the monitor.
2. Flip the Select switch up or down to select the item to be changed.
   The selected item flashes.

```
                    OTHERS
              [DEFAULT IN GREEN]

APP     : TTT100-1-RD-DAT0-A00
          REV. 1.00.00
          07/07/2009   SAT   21:15:59
CLOCK : 08/31/2009   FRI    23:11:12
S/N     : 123456-123456

LANGUAGE        ENG
COMPRESSOR TIMER                          <---- (a)
EMERGENCY MODE SETTING                    <---- (b)
INITIALIZE (BOOKKEEPING & SETTING)

EXIT

 SELECT SW : CHOOSE  ENTER SW : ENTER
```

Others screen

Item	Description
APP	Displays the version of the program on the hard disk.
CLOCK	Displays the internal clock time.
S/N	Displays the software serial No.
LANGUAGE	Select the language. ("ENG" (English) only)
(a) COMPRESSOR TIMER	Displays the compressor operating hours.
(b) EMMERGENCY MODE SETTING	This is used in the event a machine problem occurs.
INITIALIZE (BOOKKEEPING & SETTING)	Initializes the settings. (YES: Executes initialization; NO: Cancels initialization)

3. Press the Enter switch to display the test screen for the selected item.
4. After an item is selected, change the setting by using the Select switch.

(a) COMPRESSOR TIMER

This screen is used to display the compressor operating hours.

1 Select "COMPRESSOR TIMER" in the Others screen and press the Enter switch. The Compressor Timer screen appears on the monitor.

2 Flip the Select switch up or down and select an item. The selected item is indicated by flashing.

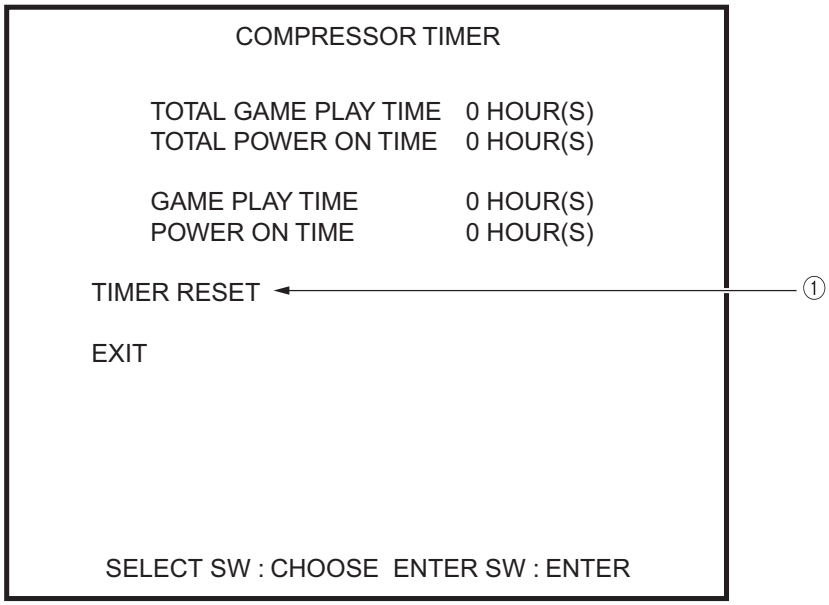

Compressor Timer screen

Item	Description
TOTAL GAME PLAY TIME	Shows the compressor operating hours (game play hours).
TOTAL POWER ON TIME	Shows the time elapsed from the first-time use of the compressor.
GAME PLAY TIME	Shows the compressor operating hours (game play hours) from the last maintenance.
POWER ON TIME	Shows the time elapsed from the last compressor maintenance.
☒ TIMER RESET	Reset the timer after the replacement or maintenance of compression.

3 Press the Enter switch to display the test screen for the selected item.

4 Select "EXIT" and press the Enter switch to return to the Others screen.

⊠TIMER RESET

This screen is used to reset the compressor timer.

1. Select "TIMER RESET" in the Compressor Timer screen and press the Enter switch. The Compressor Timer (Timer Reset) screen appears on the monitor.
2. Flip the Select switch up or down to select the item to be changed.
   The selected item flashes.

```
COMPRESSOR TIMER (TIMER RESET)

TOTAL TIMER RESET

    Caution:
    When exchanging the compressor, only then
    enter and reset from above.
    For details, please thoroughly check the manual.

TIMER RESET

    Caution:
    When finishing maintenanceon the compressor,
    only then enter and reset from above.
    For details, please thoroughly check the manual.

EXIT

 SELECT SW : CHOOSE  ENTER SW : ENTER
```

Compressor Timer (Timer Reset) screen

Item	Description
TOTAL TIMER RESET	This reset function is used after the compressor has been replaced or overhauled (see "8-1-2 Compressor maintenance/ overhaul.") This function resets the TOTAL GAME PLAY TIME, TOTAL POWER ON TIME, GAME PLAY TIME and POWER ON TIME data. (Resets the compressor operating hours to "0.") (NO: Cancels reset; YES: Executes reset)
TIMER RESET	This function is used after conducting the periodic compressor maintenance to be performed every 2,000 hours of power supply (see "8-1-2 Compressor maintenance/ overhaul")). This function resets the GAME PLAY TIME and POWER ON TIME data. (NO: Cancels reset; YES: Executes reset)

3. Press the Enter switch to display the test screen for the selected item.
4. Select "EXIT" and press the Enter switch to return to the Compressor Timer

(b) EMERGENCY MODE SETTING

This screen is used in the event a machine problem occurs.
When "Emergency Mode Setting" is set, the error check function activated at the time of machine startup will be skipped, allowing the machine to operate for game play even if some part of the machine is malfunctioning.

NOTICE

- Do not use these functions if the machine is operating normally. Incorrect use of these functions can cause an equipment problem.

1 Select "EMMERGENCY MODE SETTING" in the Others screen and press the Enter switch. The Emmergency Mode Setting screen appears on the monitor.

2 Flip the Select switch up or down to select the item to be changed.

The selected item flashes.

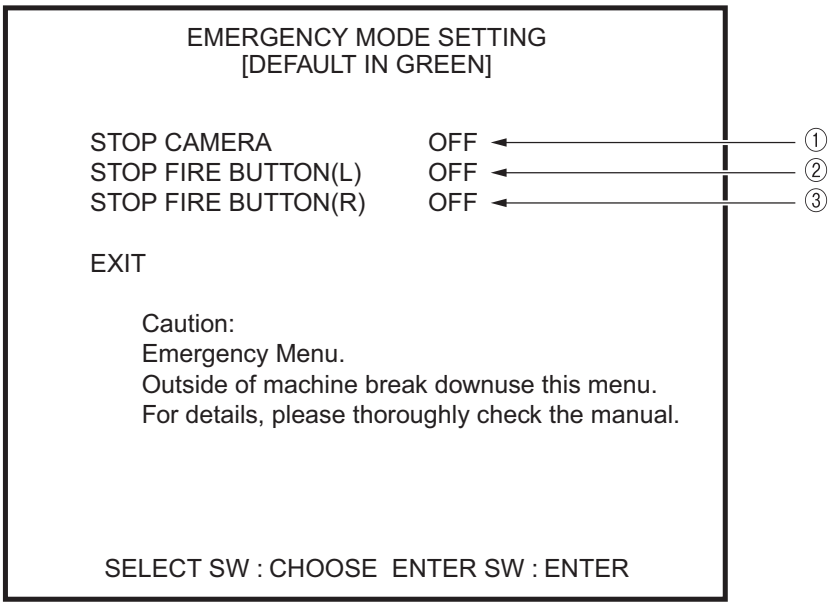

Emergency Mode Setting screen

Item	Description
☒ STOP CAMERA	This item is used when the camera malfunctions. When this setting is set to ON, the screen displays a message that the camera is disabled, and the preset character face appears on the screen.
☒ STOP FIRE BUTTON(L)	This item is used when the left Fire button malfunctions. It allows the machine to operate with the left Fire button disabled.
☒ STOP FIRE BUTTON(R)	This item is used when the right Fire button malfunctions. It allows the machine to operate with the right Fire button disabled.

3 Using the Enter switch, select an item and switch the ON/OFF condition by using the Select switch. Then, press the Enter switch.

4 Select "EXIT" and press the Enter switch to return to the Others screen.

* After selecting a item from ☒ through ☒ and changing its setting, the machine automatically restarts when exiting from the Test mode.

NOTICE

- Do not set both "STOP FIRE BUTTON (L)" and "STOP FIRE BUTTON (R)" at the same time. If both buttons are disabled at the same time, the machine will not be used for game play.

7-4-9 Clock setting (CLOCK SETTING)

This screen is used to set the internal clock.
The clock setting can be changed only when the clock time is completely incorrect (such as indication of wrong year after rack replacement) at the time of power ON.
This screen cannot be used in ordinary test mode. (This screen will not appear in normal condition.)

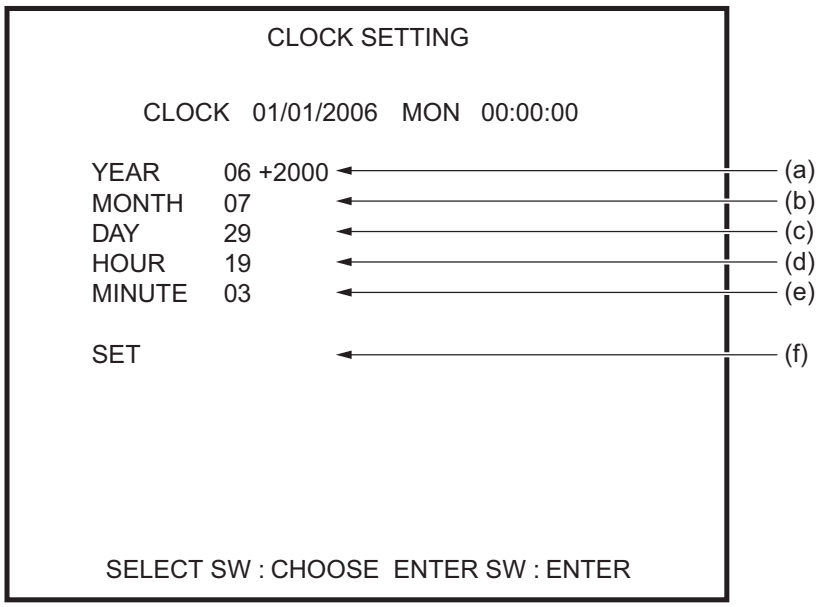

Clock Setting screen

Item	Description
(a) YEAR	Setting of the year.
(b) MONTH	Setting of the month.
(c) DAY	Setting of the day.
(d) HOUR	Setting of the hour.
(e) MINUTE	Setting of the minute.
(f) SET	Set the time. The values set in YEAR through MINUTE above will be applied to the clock.

Make sure that the correct time is set, and then set the Test switch to OFF.

7-5 Adjustment after parts replacement (INITIALIZE)

NOTICE

- Be sure to initialize the volumes after replacing the System ES1, Steering Assy volume or Pedal A Assy volume or after initializing the backup data. The machine will not operate properly unless the volumes are initialized.
- After initializing the volumes, conduct switch tests (see "7-4-4 Switch input/output tests (I/O TEST)") and make sure that "OK" is displayed when the steering wheel and pedals are operated.

7-5-1 Initializing volumes

Initialize the steering wheel and pedals by referring to "7-4-4 (b) I/F INITIALIZE."

7-6 Adjustment of the LCD monitor
- To be conducted by a technician only -

WARNING

- To adjust the LCD monitor, the power switch must be turned on. To avoid electric shock, do not touch the connectors of the speakers or monitor adjustment board.

NOTICE

- The LCD monitor has been adjusted to optimum condition at the factory. Therefore, it does not normally require adjustment.

7-6-1 Monitor adjustment switches

The monitor adjustment switches are located inside the monitor mask (R). (See "8-3-2 (4) Replacing the LCD monitor.")

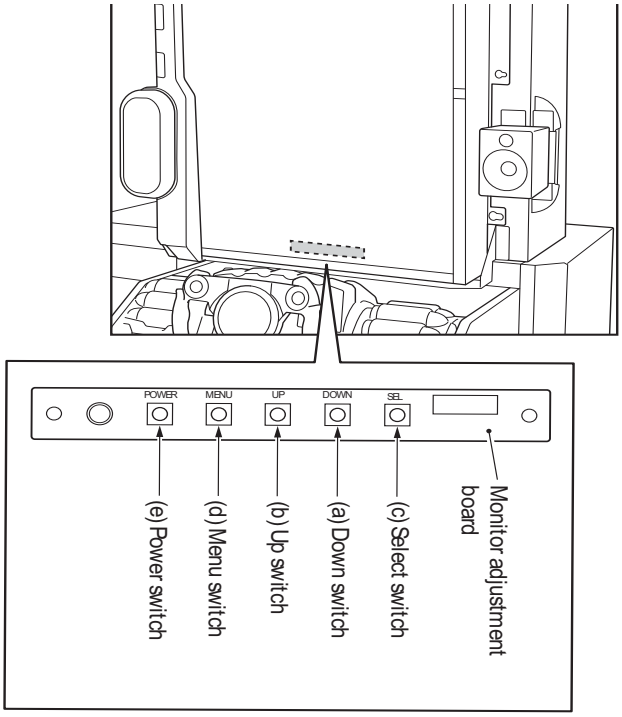

OSD Key	Function (OSD turned Off)	Function (OSD turned On)
(a) Down switch	Auto Adjustment when analog RGB is selected	Moves up in the command list during command selection. Decreases the numeric value on the numeric value setting bar.
(b) Up switch	Disabled	Moves down in the command list during command selection. Increases the numeric value on the numeric value setting bar.
(c) Select switch	Changes the input.	Cancels the selection (returns to the previous item).
(d) Menu screen	Displays the OSD menu (OSD On).	Selects a command from the OSD menu.
(e) Power switch	Turns the monitor ON/OFF.	Turns the monitor ON/OFF.

Operate Explanation

Your LCD has been adjusted to its optimal status before shipment. You can also adjust the image in accordance with the following illustrations and steps.

- Press the "Menu" button to start the OSD feature.
- Click the "+" or "-" button to select the function to be adjusted.
- Click the "Menu" button to access into the function to be adjusted.
- Click the "+" or "-" button to change the current setting of the function.
- To exit the OSD menu or go back to the previous action by clicking the "ESC" button. It will save the change automatically.
- To repeat above steps for changing the setting of other functions.

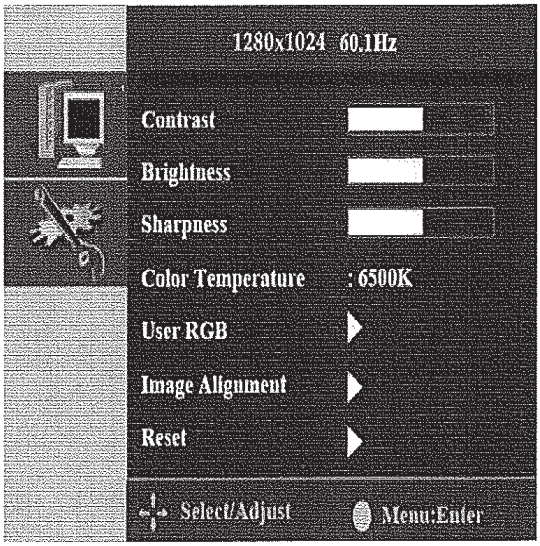

Notes

- The OSD disappears several seconds after you stop pressing the buttons while performing an adjustment.
- Any changes are automatically saved in the memory when the OSD disappears. Turning off the power should be avoided while using the menu.
- Adjustments for clock, phase and positions are saved for each signal timing. Except for these adjustments, all other adjustments have only one setting which applies to all signal timings.
- The color will change from white to pink while the function is selected.

Adjustment of Screen

Function Definition

Mode	Description	
Image Setting	Contrast	Adjust the contrast of the image.
	Brightness	Adjust the brightness of the screen.
	Sharpness	Adjust the picture sharpness.
	Color temperature	User/6500/7500/9300.
	User RGB	Adjust red/green/blue gain.
	Image Alighthent	Adjust picture position.(V-size,H-size,..)
	Reset	Restore to factory settings.
Feature Controls	Auto Color	Auto adjust the screen color.
	Screen Test	Screen Test.
	Language	Adjust the language.
	Input Source	Adjust the input source.
	OSD Timer	Adjust the OSD timer.

8. MAINTENANCE

- To protect the service staff and other people from an electric shock, accident and injury, always turn off the power switch before conducting maintenance (trouble-shooting, repair, etc.).
- Some monitor sections remain hot or charged with high voltage even after the power switch is turned off. Do not touch the monitor unnecessarily in order to prevent electric shock and burns.

8-1 Inspection and maintenance

- Conduct maintenance periodically. Failure to conduct periodic inspection may result in unexpected accidents.
- Conduct a pre-service check everyday to prevent accidents. (See "7-1 Pre-service check.")

8-1-1 Inspection items - To be conducted by a technician only -

Check the following inspection items regularly.

(1) Inspecting the level adjusters
- Make sure that the machine is installed stably. (See "5-3-2 Adjusting the level adjusters" and "5-3-4 Connecting the Ride (L), (R) Assys.")

(2) Inspecting the power cord plug
- Make sure that the power cord is plugged firmly into the Cord Box Assy of the machine and the AC outlet.
- If the connector sections are dusty, clean them.
- Check the power cord for cracks and dirty sheath. If there is any abnormality in the power cord, replace it with a new cord.

(3) Inspecting fasteners for tightness

Check the following screws and bolts for tightness. If any of them is loose, tighten firmly.
- Steering Assy retaining screws
  (See "8-3-6 (1) Removing and installing the Steering Assy.")
- Steering wheel retaining screws
  (See "8-3-6 (3) Replacing the steering wheel.")
- Pedal A Assy retaining screws
  (See "8-3-8 (1) Removing and installing the Pedal A Assy.")
- Others

(4) Inspecting the communication cables
- Check the cables to make sure their connectors are connected firmly. Also, check the cables for abnormalities.

8-1-2 Compressor maintenance/overhaul
- To be conducted by a technician only -

- To protect the service staff and other people from an electric shock, accident and injury, always turn off the power switch on the Compressor Assy before conducting the described task.
- Some parts of the compressor remain hot even after the power switch is turned off. When conducting maintenance of the compressor or nearby parts, wait for at least one hour after stopping the compressor operation and make sure that the compressor is sufficiently cool.

NOTICE

- If maintenance/overhaul is not conducted as specified, the service life of the compressor shortens significantly. Be sure to conduct maintenance/overhaul based on the cumulative hours of power supply to the compressor.
- If maintenance/overhaul cannot be conducted for an unavoidable reason, operate the machine with the power switch of the Compressor Assy turned off.
- If the machine has been stored for a long period of time in a warehouse, conduct maintenance/overhaul according to the length of storage period by referring to the table below.
- After conducting compressor maintenance/overhaul, be sure to reset the compressor timer. (See "7-4-8 (a) COMPRESSOR TIMER.")

Inspection/maintenance item	Inspection/maintenance interval
(1) Drainage of water from the Compressor Assy. (2) Checking the Compressor Assy for abnormal sound and vibration. (3) Inspection of the filter regulator pressure setting.	Daily
(4) Confirmation of startup and stopping of the Compressor Assy. (5) Inspection of the compressor filter. (6) Inspection of the Y-type strainer (7) Inspection of the drainage solenoid valve (8) Inspection of the filter regulator element	Every 2,000 hours of power supply (5.5 months when operated 12 hours per day)
(9) Overhaul	Every 8,000 hours of power supply (22 months when operated 12 hours per day)

(1) Draining water from the Compressor Assy

If water is not drained from the Compressor Assy regularly, water can enter the pneumatic drive section and cause a malfunction. If water is not drained, rust remains in the air tank, resulting in the clogging of the filter regulator, Y-type strainer and drainage solenoid valve to cause a malfunction.

1 Turn off the power switch on the Compressor Assy (see "5-6 Turning on the power switch"), and drain water from the compressor, together with compressed air.

2 Using the provided maintenance key, open the maintenance door, and discard water from the coin box (tray).

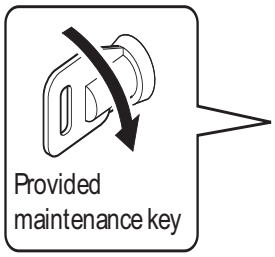

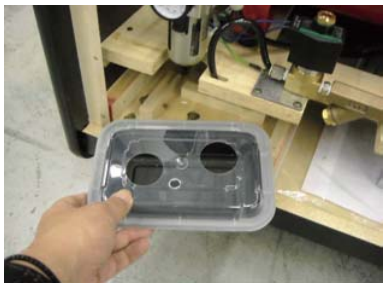

(2) Checking the Compressor Assy for abnormal sound and vibration

1 Check the compressor for abnormal vibration or noise during operation.

2 If the compressor produces abnormal vibration or noise, turn off the power switch on the Compressor Assy (see "5-6 Turning on the power switch"), and check mounting parts, bolts and nuts on the compressor to make sure that are not loose. If the compressor continues to produce abnormal vibration or noise after bolts and other parts are tightened firmly, contact your distributor.

(3) Inspecting the filter regulator pressure setting

- The Compressor Assy must be turned on in order to conduct the inspection. Exercise caution to avoid burns, entanglement and electric shock. Do not touch any of the following sections when conducting the inspection.
  - Compressor main unit, high-temperature sections such as copper pipes
  - Rotating parts such as fan
  - Power supply parts charged with voltage
- Do not put your face close to the compressor since the safety valve may be activated during compressor operation.

If the pressure setting is lower than 0.3 MPa, the motion becomes dull, thus providing a weaker vibration.
If the machine continues to operate with a pressure setting of higher than 0.3 MPa, high stress is applied to the machine and it can cause a malfunction.

1 Turn on the power switch on the Compressor Assy (see "5-6 Turning on the power switch"), and wait until the compressor stops (approx. 4 minutes).

2 Using the provided maintenance key, open the maintenance door and check the

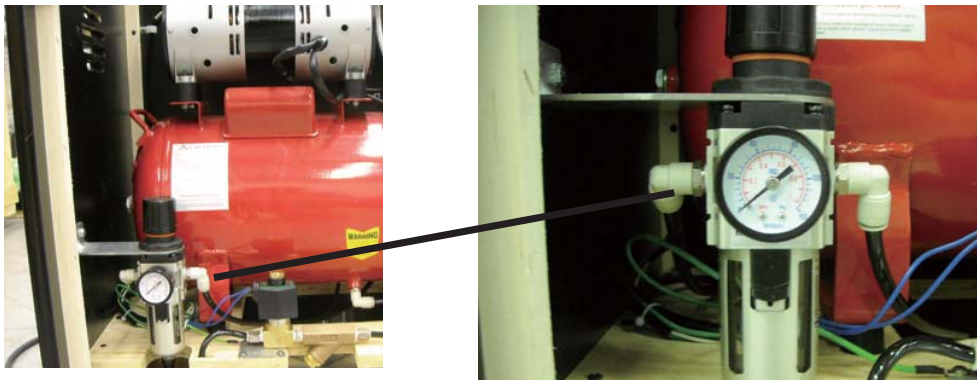

3 If the indicator shows a value other than 0.3 MPa, remove the side panel (L) and cover (see "8-3-9 (1) Replacing the compressor"), and adjust the pressure by following the adjustment procedure described below.

(a) When the indicator indicates a value lower than specified
Pull up the knob and turn it to the right as shown in Fig. (a) until the indicator indicates 0.3 MPa. Lower the knob until a clicking sound is produced.

(b) When the indicator indicates a value higher than specified
Pull up the knob and turn it to the left as shown in Fig. (b) until the indicator indicates 0 MPa, then turn the knob to the right until the indicator indicates 0.3 MPa. Lower the knob until a clicking sound is produced.

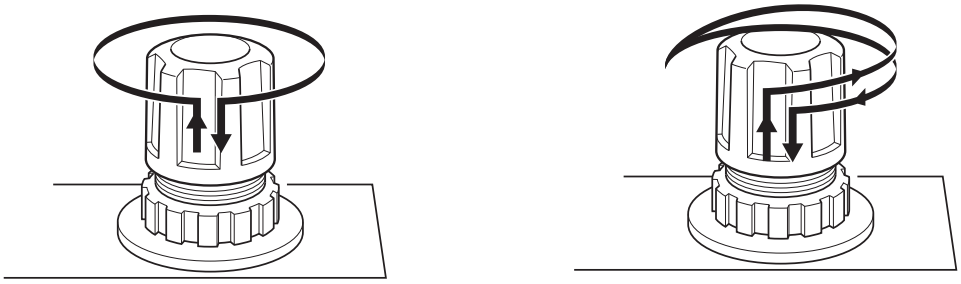

4 Reinstall the side panel (L) and cover. (See "8-3-9 (1) Replacing the compressor.")

(4) Confirming startup and stopping of the Compressor Assy

1. Turn off the power switch on the Compressor Assy (see "5-6 Turning on the power switch"), and make sure that the compressor starts up.
2. Check that the compressor stops after about 4 minutes.
3. If the compressor does not stop, turn off the power switch on the Compressor Assy and the power switch on the main unit (see "5-6 Turning on the power switch"), and inspect the air tube joints between the Ride (L), (R) Assys and the Front Assy (see "5-3-4 Connecting the Ride (L), (R) Assys) and the air tube joint between the Compressor Assy and Front Assy (see "5-3-5 Installing the Compressor Assy").
4. If the air tubes are not disconnected and the compressor fails to stop, contact your distributor.

(5) Inspecting the compressor filter

If the machine continues to operate with a dirty filter, the pressure can decrease due to clogging and causes a malfunction.

1. Remove the filter from the compressor. (See "8-3-9 (2) Removing and installing the compressor filter.")
2. Clean the filter with compressed air to remove foreign particles. If foreign particles cannot be removed with compressed air, replace it with a new filter.

(6) Inspecting the Y-type strainer

If the Y-type strainer becomes covered with dust, water will not drain properly and it can enter the pneumatic drive section and cause a malfunction. If water is not drained, rust remains in the air tank, resulting in the clogging of the filter regulator, Y-type strainer and drainage solenoid valve to cause a malfunction.

1. Remove the Y-type strainer and detach the mesh screen. (See "8-3-9 (4) Removing and installing the Y-type strainer mesh screen.")
2. Clean the mesh filter with water to remove foreign particles. If foreign particles cannot be removed by washing with water, replace it with a new mesh screen.

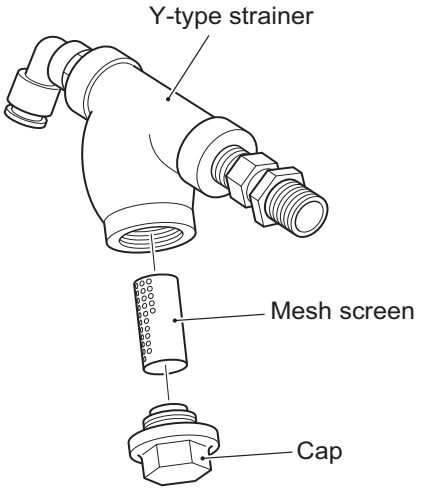

(7) Inspecting the drainage solenoid valve

If the drainage solenoid valve does not function correctly, water will not drain properly and can enter the pneumatic drive section to cause a malfunction. If water is not drained, rust remains in the air tank, resulting in the clogging of the filter regulator, Y-type strainer and drainage solenoid valve to cause a malfunction.

1 Remove the drainage solenoid valve (see "8-3-9 (3) Removing and installing the solenoid valve for drainage").

2 Cut the cable tie attached on the drainage solenoid valve, and dismount the head.

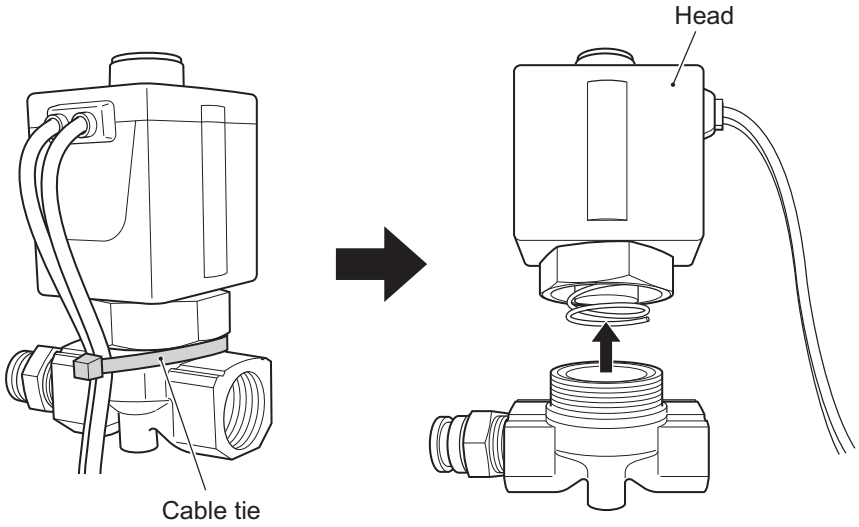

3 After dismounting the head, inspect the spring, seat and O-ring. If the O-ring is damaged, replace the solenoid valve.

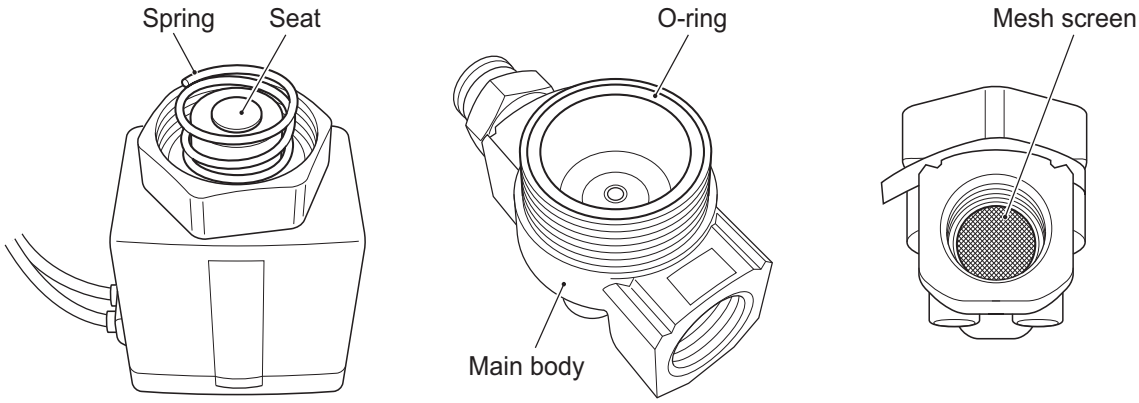

4 Pour water from the top section of the main body to wash off dust particles from the mesh screen

5 Check to make sure that the O-ring is free of scratch or damage. Check that the seat has no dust particles. Make sure that the spring is inserted all the way.

6 To reinstall, follow the removal sequence in reverse.

(8) Inspecting the filter regulator element

If the machine continues to operate with a dirty element, the pressure decreases and may cause a malfunction

1 Remove the element. (See "8-3-9 (6) Replacing the element.")

2 Clean the element with compressed air to remove foreign particles. If foreign particles cannot be removed with compressed air, replace it with a new element.

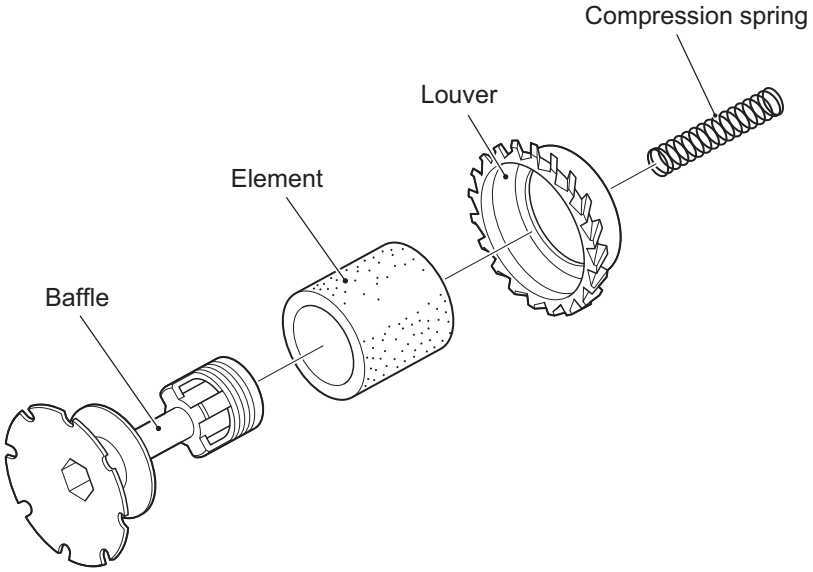

NOTICE

- Never wash the element with water. If water enters the pneumatic drive section, malfunctions can occur.

(9) Overhaul

If the cumulative hours of power supply exceeds 8,000 hours (approximately 22 month when used 12 hours per day), the compressor must be overhauled.
For details, contact your distributor.

8-2 Troubleshooting

- To protect the service staff and other people from an electric shock, accident and injury, and to prevent damage to the electrical circuitry of the machine, always turn off the power switch before conducting the described task.
- If the generated problem symptom does not apply to any of the descriptions in Sections 8-2-1 through 8-2-7 or if the action taken does not result in an improvement, turn off the power switch immediately to stop the machine operation, then contact your distributor. Operating the machine without correcting problems can result in an unexpected accident.

NOTICE

- In the event a machine problem occurs, first, check to make sure that all connectors are connected securely.
- If there is a problem in the System ES1, TK06 Amp PC Board, Namcam 3, NA-JV3 PC Board, Straight PC Board or SWR PC Board, the faulty parts must be repaired by our company. Never use a tester to conduct a continuity test. Internal voltage of a tester can damage ICs.
- When sending parts for repair, pack them carefully to prevent them from receiving damage during transportation. When sending the System ES1, TK06 Amp PC Board, Namcam 3, NA-JV3 PC Board, Straight PC Board or SWR PC Board, cover it completely with sponge or bubble wrap and place it in a corrugated cardboard box to protect it against external impact.

8-2-1 General - To be conducted by a technician only -

- Before conducting troubleshooting, make sure that all connectors are connected firmly.

Symptom	Main cause	Remedy	Page
• The machine does not start up.	• The System ES1 connector is disconnected.	• Connect the connector securely.	Page 88
	• The System ES1 is faulty.	• Contact your distributor.	----
• Communication-linked game cannot be played..	• The communication cables are not connected.	• Check the connection of communication cables.	Page 32
	• There is an open-circuit in the communication cable.	• Replace the faulty communication cable.	Page 32
	• The provided router is malfunctioning.	• Replace the router.	Page 31
• The machine does not operate stably, or it malfunctions.	• The power supply voltage is outside the range of 90 to 110 VAC.	• Disconnect large power consuming equipment (air conditioners, large rides, etc.) from the same power line, and ensure that the game machine receives the specified power supply voltage.	----
• The machine turns off in the middle of operation.	• The circuit protector inside the power switch was activated and turned off the power switch. * The circuit protector is designed to cut off the power supply when an abnormal current flows.	• Turn on the power switch again. If the circuit protector is activated frequently, there is a problem in the machine. Contact your distributor.	Page 38

8-2-2 Front Assys - To be conducted by a technician only -

Symptom	Main cause	Remedy	Page
• There is no sound from the speakers.	• The sound level is set very low.	• Readjust the sound level.	Page 61
	• The System ES1 connector is disconnected.	• Connect the connector securely.	Page 88
	• The TK06 Amp PC Board is faulty.	• Replace the TK06 Amp PC Board.	Page 90
	• The System ES1 is faulty.	• Contact your distributor.	----
• The monitor does not display images.	• The connector is disconnected.	• Connect the connector securely.	Page 88
	• The monitor is faulty.	• Replace the monitor.	----
	• The System ES1 is faulty.	• Contact your distributor.	----
• The camera does not operate.	• The connector is disconnected.	• Connect the connector securely.	Page 88 Page 91
	• The Namcam 3 (camera) is faulty.	• Replace the Namcam 3 (camera).	Page 91
• The monitor displays a blue screen.	• The System ES1 generated a startup error.	• Turn off the power switch, wait for at least 30 seconds, and then turn on the power switch again.	Page 38

8-2-3 Signboard Assy - To be conducted by a technician only -

Symptom	Main cause	Remedy	Page
• The fluorescent lamps do not light.	• The connector is disconnected.	• Connect the connector securely.	Page 87
	• The fluorescent lamps are burnt out.	• Replace the fluorescent lamps.	Page 87

8-2-4 Cabinet (L), (R) Assys - To be conducted by a technician only -

Symptom	Main cause	Remedy	Page
• The Vibration Stop button does not function. It does not light.	• The fluorescent lamps are burnt out.	• Replace the fluorescent lamps.	Page 101

8-2-5 Seat (L), (R) Assys - To be conducted by a technician only -

Symptom	Main cause	Remedy	Page
• There is no sound from the speakers.	• The sound level is set very low.	• Readjust the sound level.	Page 61
	• The connector is disconnected.	• Connect the connector securely.	Page 22
	• The TK06 Amp PC Board is faulty.	• Replace the TK06 Amp PC Board.	Page 90
• The seat does not vibrate.	• The compressor power switch is turned off.	• Turn on the power switch on the compressor.	Page 39
	• The air tube is disconnected.	• Connect the air tube securely.	Page 22 Page 105
	• The pneumatic valve is faulty.	• Replace the pneumatic valve.	Page 75
	• The compressor is faulty.	• Replace the compressor.	----

8-2-6 Steering Assy - To be conducted by a technician only -

Symptom	Main cause	Remedy	Page
• The steering wheel does not function.	• The volume is not initialized.	• Initialize the volume.	Page 61
	• The connector is disconnected.	• Connect the connector securely.	Page 22 Page 104
	• The volume is not installed correctly.	• Install the volume correctly.	Page 111
	• The volume is faulty.	• Replace the volume.	Page 111
• The Fire button does not function. It does not light.	• The connector is disconnected.	• Connect the connector securely.	Page 110
	• The SWR PC Board is faulty.	• Replace the SWR PC Board.	Page 113
• The steering wheel does not vibrate.	• The compressor power switch is turned off.	• Turn on the power switch on the compressor.	Page 39
	• The air tube is disconnected.	• Connect the air tube securely.	Page 25
	• The pneumatic valve is faulty.	• Replace the pneumatic valve.	Page 75
	• The compressor is faulty.	• Replace the compressor.	----

8-2-7 Pedal A Assy - To be conducted by a technician only -

Symptom	Main cause	Remedy	Page
• The right and left pedals do not function.	• The volume is not initialized.	• Initialize the volume.	Page 61
	• The connector is disconnected.	• Connect the connector securely.	Page 22 Page114
	• The volume is not installed correctly.	• Install the volume correctly.	Page 116
	• The volume is faulty.	• Replace the volume.	Page 116

8-2-8 Compressor Assy - To be conducted by a technician only -

Symptom	Main cause	Remedy	Page
• There is a burnt smell.	• The motor is overheating due to excess load.	Turn off the power switch on the Compressor Assy immediately, unplug the power cord, and contact your distributor.	----
• The Compressor Assy turns off frequently.	• Excessive current is flowing due to compressor abnormality.		
• The compressor does not operate.	• The power cord is disconnected.	• Connect the power cord securely.	Page 36
	• The thermal protector has activated.	• Press the protector reset button.	----
	• The compressor is faulty.	Turn off the power switch on the Compressor Assy immediately, unplug the power cord, and contact your distributor.	----
• The thermal protector is activated frequently.	• The compressor is faulty.	Turn off the power switch on the Compressor Assy immediately, unplug the power cord, and contact your distributor.	----
• The Compressor Assy generates abnormal noise or vibration.	• Screws are loose.	• Tighten the screws firmly.	----
	• The compressor is faulty.	Turn off the power switch on the Compressor Assy immediately, unplug the power cord, and contact your distributor.	----
• The compressor operates frequently even when game is not played.	• The air tube is disconnected.	• Connect the air tube securely.	Page 25
	• The compressor is faulty.	Turn off the power switch on the Compressor Assy immediately, unplug the power cord, and contact your distributor.	----
• The air tube has expanded.	• The air tube is clogged with dust or rust.	• Replace the air tube.	Page 25 Page 73

8-2-9 Error display

* If the error indication remains after the appropriate countermeasure has been taken, set the Test switch to ON and then to OFF to reset the error indication.

(1) Communication-related errors

Symptom	Main cause	Remedy	Page
The seat cannot be confirmed to seat ID1. Please change the setting by the static test mode. After that, the game will automatically reboot.	• There is no seat assigned with Seat ID No. 1.	• Using the Test mode, set Seat ID No. 1 to one of the seats in.	Page 40
	• The power switch for the seat with Seat ID No. 1 is turned off.	• Turn on the seat with Seat ID No. 1.	Page 36
Seat ID duplicated. Please adjust Test Mode settings. After that, the game will automatically reboot.	• Two or more seats are assigned with the same Seat ID.	• In the Test mode, change the seat IDs so that the same ID is not assigned twice.	Page 40
The seat cannot be confirmed to seat ID1. Check connection.	• The power switch for the seat with Seat ID No. 1 is turned off.	• Turn on the seat with Seat ID No. 1.	Page 36
	• The communication cable is disconnected from the seat with Seat ID No. 1.	• Connect the communication cable securely to the seat with Seat ID No. 1.	Page 30
	• There is an open-circuit in the communication cable connected to the seat with Seat ID No. 1.	• Replace the communication cable for the seat with Seat ID No. 1.	Page 30
	• The communication cable is disconnected from the seat that generated the error.	• Connect the communication cable securely to the seat that generated the error.	Page 30
	• There is an open-circuit in the communication cable connected to the seat that generated the error.	• Replace the communication cable for the seat that generated the error.	Page 30
A transmission error has occurred. Check connection.	• The communication cable is disconnected from the seat that generated the error.	• Connect the communication cable securely to the seat that generated the error.	Page 30
	• There is an open-circuit in the communication cable connected to the seat that generated the error.	• Replace the communication cable for the seat that generated the error.	Page 30
	• Unknown communication problem has occurred.	• Turn off the power switch, wait for at least 30 seconds, and then turn on the power switch again. If the problem persists, contact your distributor.	Page 36

(2) Coin-related errors

Symptom	Main cause	Remedy	Page
COIN ERROR 1 COIN SELECTOR	• The coin selector is faulty.	• Contact your distributor.	----
	• The NA-JV3 PC Board is faulty.	• Replace the NA-JV3 PC Board.	Page 96
COIN ERROR 2 SERVICE SWITCH	• The Service switch is faulty.	• Contact your distributor.	----
	• The NA-JV3 PC Board is faulty.	• Replace the NA-JV3 PC Board.	Page 96

(3) Other errors

Symptom	Main cause	Remedy	Page
A camera error has occurred.	• The cable for the Namcam 3 (camera) is disconnected.	• Connect the cable for the Namcam 3 (camera) securely.	Page 91
	• The Namcam 3 (camera) is faulty.	• Replace the Namcam 3 (camera).	Page 91
[Release the fire button] If you release the fire button and the screen still does not change the fire button is damaged. Use the test mode to confirm which button is damaged. For repairing the fire button, please thoroughly check the manual.	• The Fire button is faulty.	• Using the Test mode, check which Fire button is faulty, and replace the faulty button.	Page 56 Page 110
I/O PCB ERROR	• The NA-JV3 PC Board is faulty.	• Replace the NA-JV3 PC Board.	Page 96
The Test Mode settings have been reset. Please readjust settings in Test Mode.	• The data in the backup memory has been initialized or is corrupted.	• Enter the settings in the Test mode again.	Page 36
		• If this error occurs frequently, the System ES1 may be malfunctioning. Contact your distributor.	----

Symptom	Main cause	Remedy	Page
The dongle has not been inserted Insert the dongle and toggle the test switch ON and OFF.	• The USB dongle is not plugged in.	• Contact your distributor.	----
Clock has been reset.	• Note that the clock time may become inaccurate due to rack replacement or other reasons.	• Set the Test switch to ON and adjust the clock.	Page 67
[Compressor needs to be overhauled or exchanged] Please maintain the compressor according to the manual. If the machine is kept operating, please turn off the compressor unit power.	• The total power supply time have exceeded 2000 hours.	• Conduct maintenance of the compressor. After the maintenance, reset the timer using "TIMER RESET" in the Test mode.	Page 65 Page 73
[Compressor needs to be maintained] Please overhaul or exchange the compressor according to the manual. If the machine is kept operating, please turn off the compressor unit power.	• The total power supply time has exceeded 8000 hours.	• Contact your distributor. After the replacement (overhaul), reset the timer using "TOTAL TIMER RESET" in the Test mode.	Page 65

8-3 Removing and installing Assys and parts

8-3-1 Signboard Assy - To be conducted by a technician only -

(1) Replacing the fluorescent lamps

- To protect the service staff and other people from an electric shock, accident and injury, and to prevent damage to the electrical circuitry of the machine, always turn off the power switch before conducting the described task.

CAUTION

- The fluorescent lamps become hot. Exercise caution when removing.
- Since the replacement of the fluorescent lamps is performed at a height, exercise caution.

1. Remove the eight Torx bolts (M5 x 8) and eight flat washers (large, round) (M5), and dismount the title panel from the Signboard Assy.
2. Replace the fluorescent lamps.

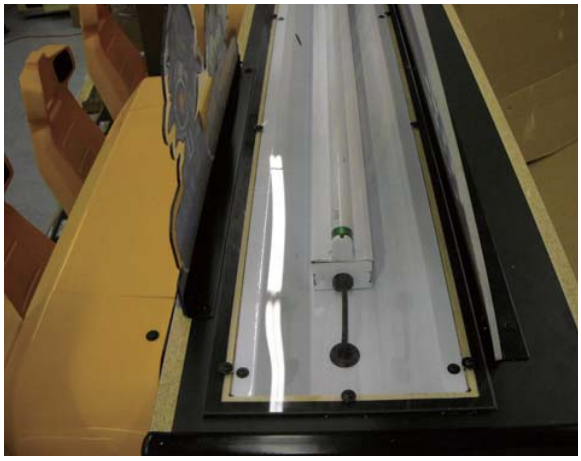

3. To reinstall, follow the removal sequence in reverse.

8-3-2 Monitor (L), (R) Assys - To be conducted by a technician only -

(1) Replacing the System ES1

- To protect the service staff and other people from an electric shock, accident and injury, and to prevent damage to the electrical circuitry of the machine, always turn off the power switch before conducting the described task.

1 Dismount the maintenance door. (See "5-4 Removing and installing the maintenance door.")

2 Disconnect the power cord plug and nine connectors.

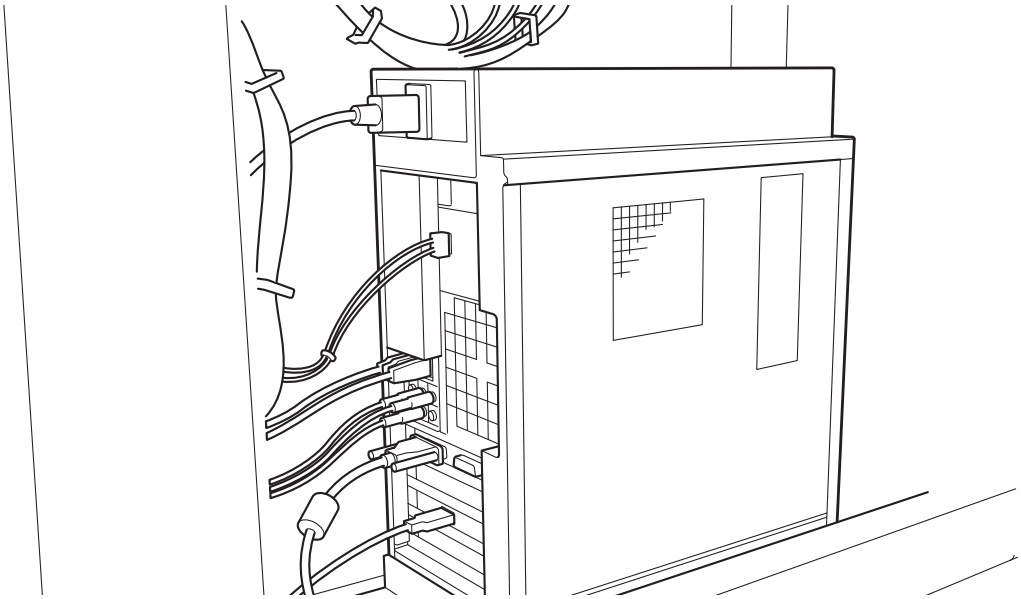

3 Remove the four Phillips hexagon-head bolts (with flat and spring washers) (M6 x 8) and dismount the System ES1 by slightly tilting it forward.

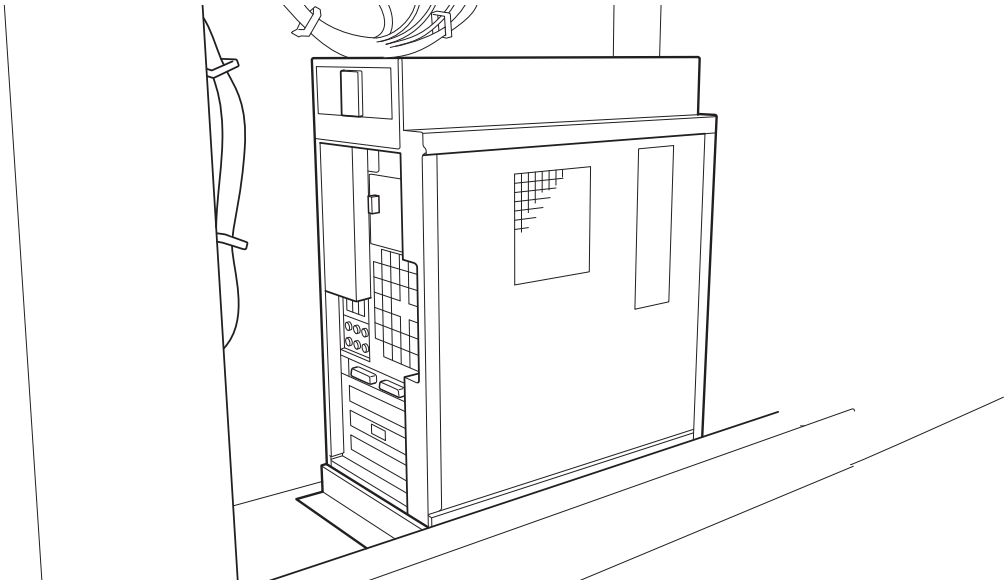

4 Remove the six Phillips pan-head screws (with flat and spring washers) (M4 x 8) and dismount the rack base from the System ES1.

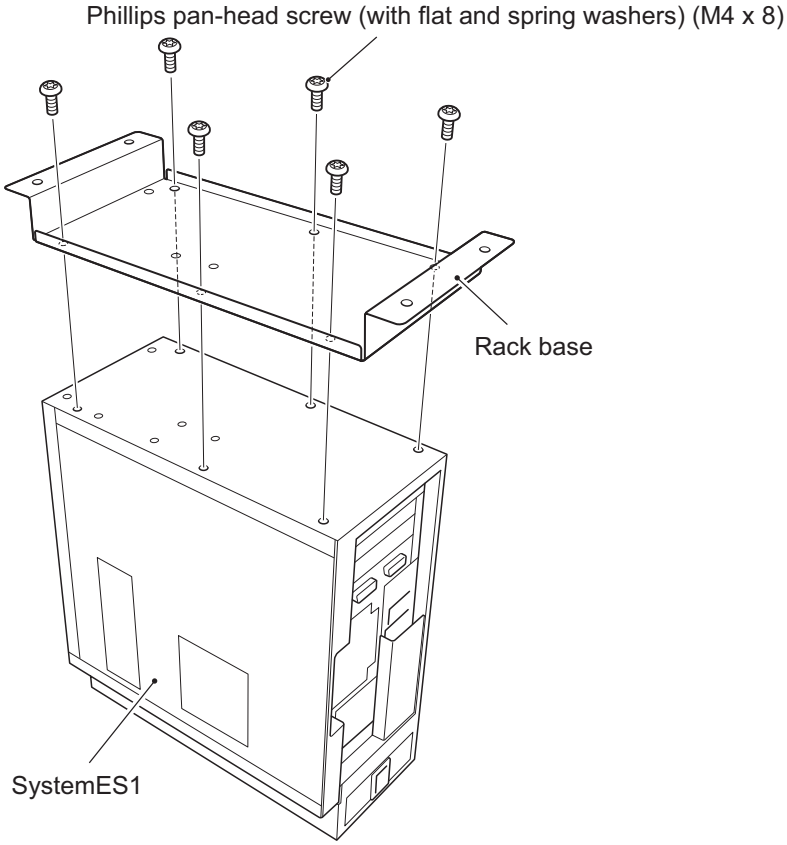

5 To reinstall, follow the removal sequence in reverse.

(2) Replacing the TK06 Amp PC Board

- To protect the service staff and other people from an electric shock, accident and injury, and to prevent damage to the electrical circuitry of the machine, always turn off the power switch before conducting the described task.

NOTICE

- The PC board can be easily damaged by static electricity. If the PC board is handled by a person charged with static electricity, parts mounted on the PC board can become damaged. Before touching the PC board, be sure to remove static electricity from your body by touching a grounded metal.

1 Dismount the maintenance door. (See "5-4 Removing and installing the maintenance door.")

2 Disconnect the six connectors.

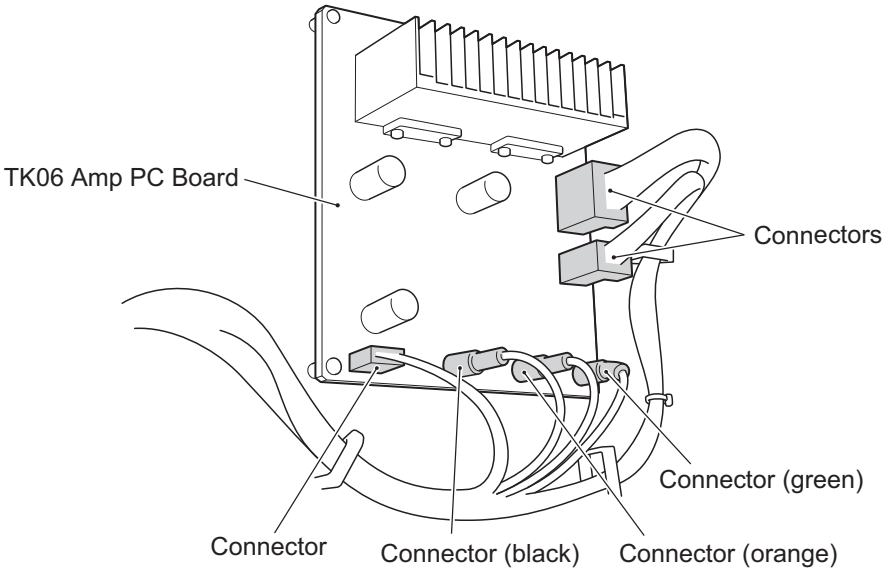

3 Remove the four Phillips pan-head screws (with flat and spring washers) (M3 x 6) and dismount the TK06 Amp PC Board.

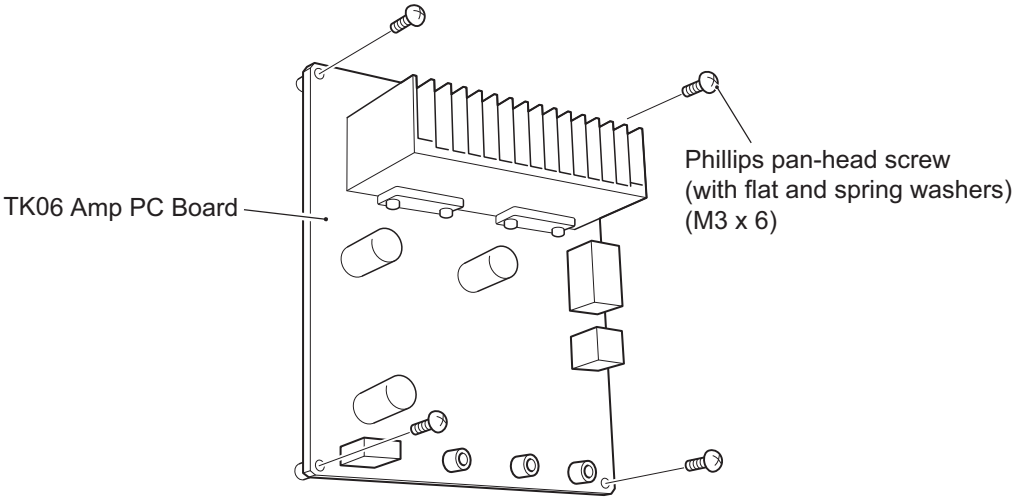

4 To reinstall, follow the removal sequence in reverse.

(3) Replacing the Namcam 3 (camera)

- To protect the service staff and other people from electric shock, accident and injury and to prevent damage to the electric circuitry of the machine, be sure to turn off the power switch before initiating the described task.

NOTICE

- The PC board can be easily damaged by static electricity. If the PC board is handled by a person charged with static electricity, parts mounted on the PC board can become damaged. Before touching the PC board, be sure to remove static electricity from your body by touching a grounded metal.

1 Remove the four Torx bolts (M5 x 8) and dismount the tank.

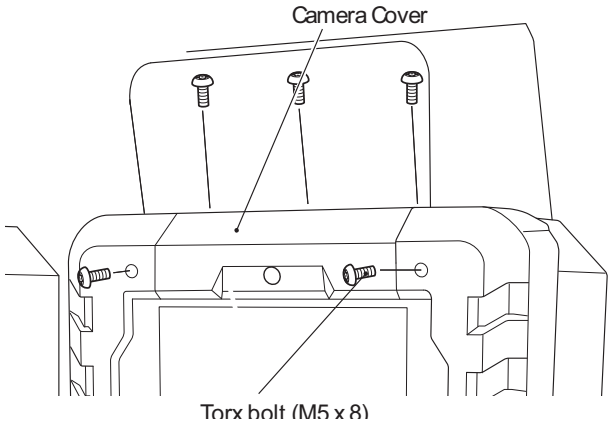

2 Disconnect the USB connector.

3 Remove the two countersunk washer nuts (M4) and dismount the camera stay.

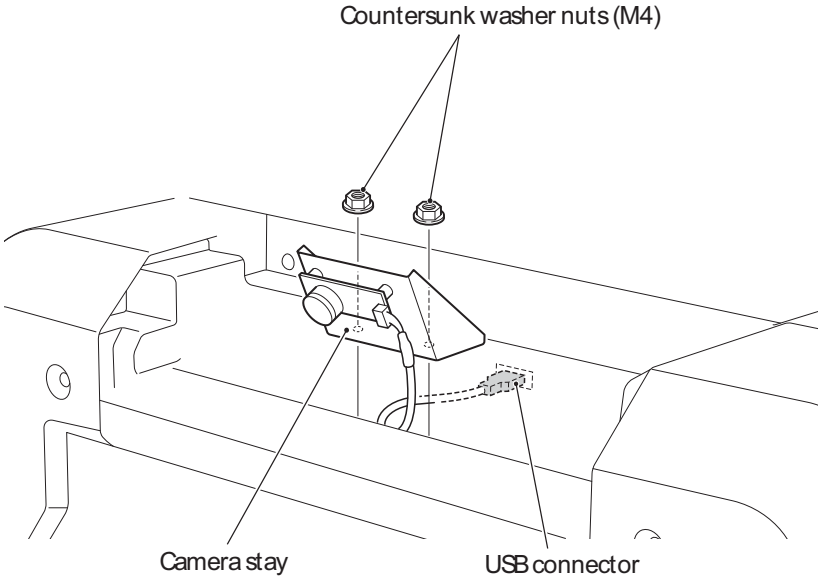

4 Remove the two Phillips pan-head screws (M2 x 4) and replace the Namcam 3 (camera).

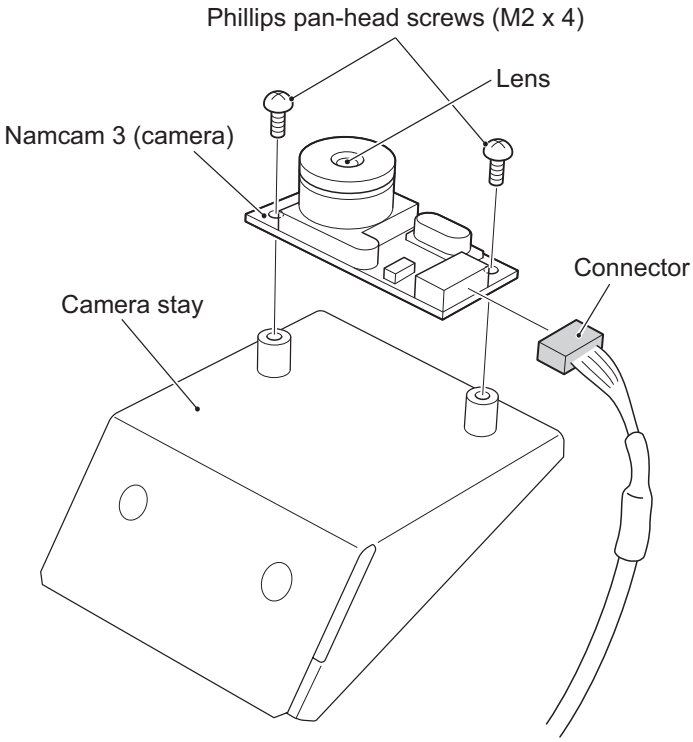

5 To reinstall, follow the removal sequence in reverse.

NOTICE

- Do not touch the lens on the Namcam 3 (camera). Touching the lens can result in an equipment malfunction.

MEMOS

NOTES

8-3-2 Monitor Base Assy - To be conducted by a technician only -

(1) Removing and installing the power supply base

- To protect the service staff and other people from electric shock, accident and injury and to prevent damage to the electric circuitry of the machine, be sure to turn off the power switch before initiating the described task.

1 Remove the four Torx bolts (M5 x 8) and dismount the center panel A.

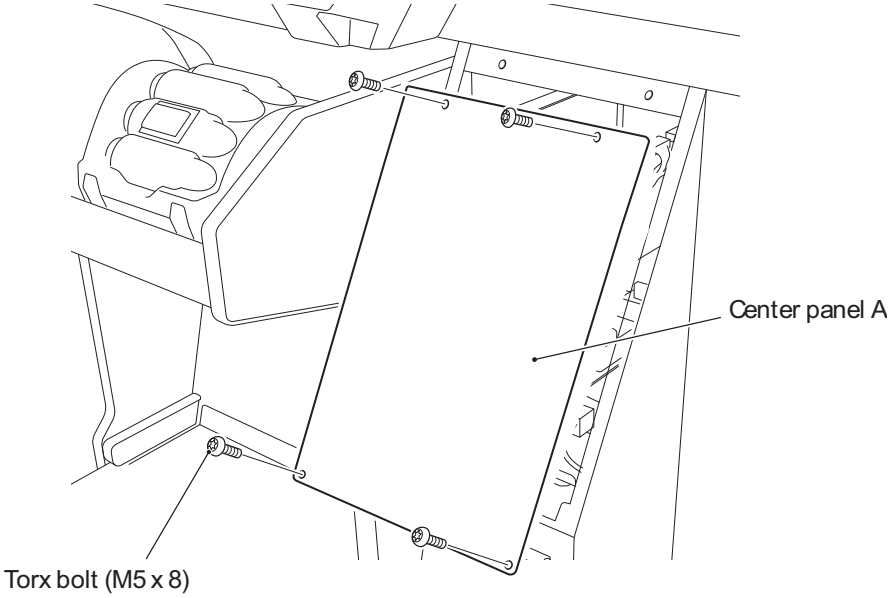

2 DDisconnect the three connectors.

3 Remove the Torx bolts and pull out the power supply base toward the front.

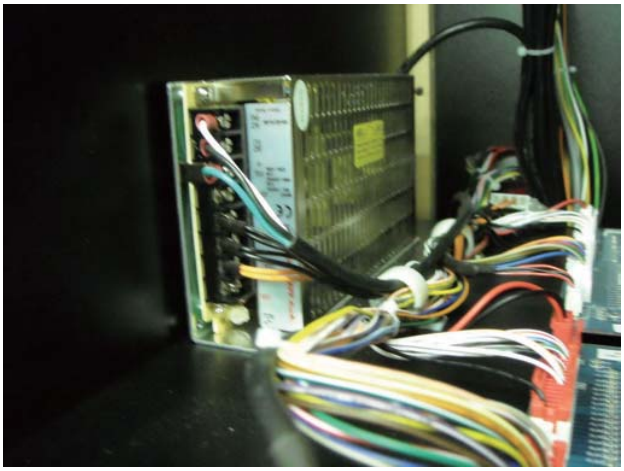

4 To reinstall, follow the removal sequence in reverse.

(2) Replacing the NA-JV3 PC Board

- To protect the service staff and other people from an electric shock, accident and injury, and to prevent damage to the electrical circuitry of the machine, always turn off the power switch before conducting the described task.

NOTICE

- The PC board can be easily damaged by static electricity. If the PC board is handled by a person charged with static electricity, parts mounted on the PC board can become damaged. Before touching the PC board, be sure to remove static electricity from your body by touching a grounded metal.

1 Remove the power supply base. (See "8-3-2 (1) Removing and installing the power supply base.")

2 Disconnect the four connectors from each PC board.

3 Remove the four Phillips pan-head screws (with flat and spring washers) (M3 x 6) from each PC board, and dismount and replace the NA-JV3 PC Board (1P) and NA-JV3 PC Board (P2).

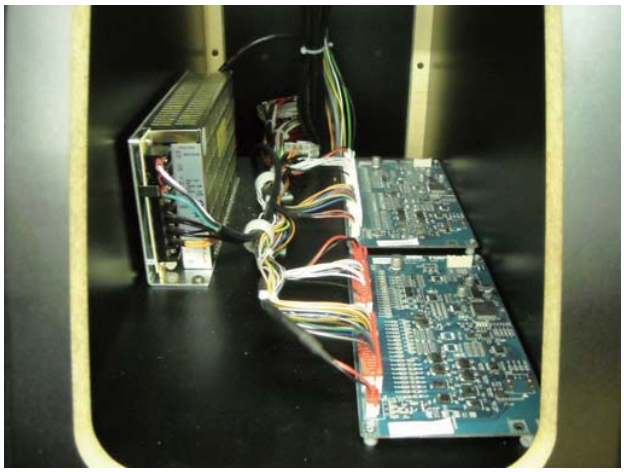

4 To reinstall, follow the removal sequence in reverse.

(3) Replacing the switching regulator (24 V)

- To protect the service staff and other people from an electric shock, accident and injury, and to prevent damage to the electrical circuitry of the machine, always turn off the power switch before conducting the described task.

NOTICE

- The PC board can be easily damaged by static electricity. If the PC board is handled by a person charged with static electricity, parts mounted on the PC board can become damaged. Before touching the PC board, be sure to remove static electricity from your body by touching a grounded metal.

1 Remove the power supply base. (See "8-3-2 (1) Removing and installing the power supply base.")

2 Disconnect the two connectors from each board.

3 Remove the four Phillips pan-head screws (with flat and spring washers) (M3 x 6) from each board, and dismount and replace the switching regulators (24 V).

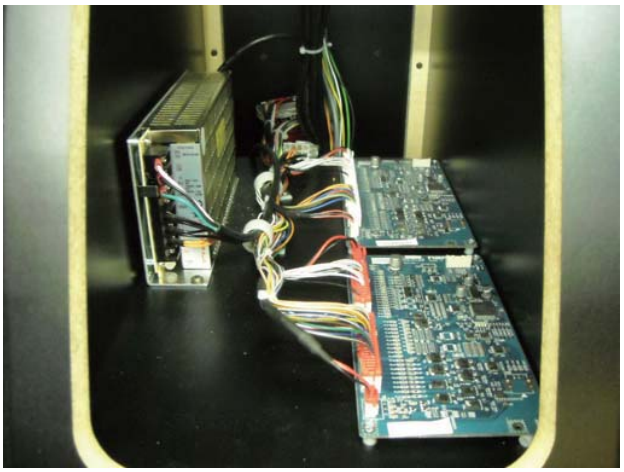

4 To reinstall, follow the removal sequence in reverse.

(4) Replacing the switching regulator (12 V)

- To protect the service staff and other people from an electric shock, accident and injury, and to prevent damage to the electrical circuitry of the machine, always turn off the power switch before conducting the described task.

NOTICE

- The PC board can be easily damaged by static electricity. If the PC board is handled by a person charged with static electricity, parts mounted on the PC board can become damaged. Before touching the PC board, be sure to remove static electricity from your body by touching a grounded metal.

1 Remove the power supply base. (See "8-3-2 (1) Removing and installing the power supply base.")

2 Disconnect the two connectors from each board.

3 Remove the four Phillips pan-head screws (with flat and spring washers) (M3 x 6), and dismount and replace the switching regulators (12 V).

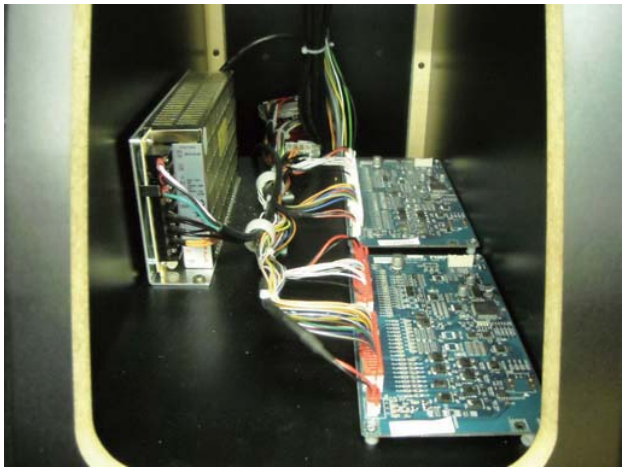

4 To reinstall, follow the removal sequence in reverse.

(5) Replacing the Straight PC Board

- To protect the service staff and other people from an electric shock, accident and injury, and to prevent damage to the electrical circuitry of the machine, always turn off the power switch before conducting the described task.

NOTICE

- The PC board can be easily damaged by static electricity. If the PC board is handled by a person charged with static electricity, parts mounted on the PC board can become damaged. Before touching the PC board, be sure to remove static electricity from your body by touching a grounded metal.

1 Remove the four Torx bolts (M5 x 8) from the rear side of the Front Assy, and pull out the LAN PCB base.

2 Disconnect the two connectors from the back side of the LAN PCB base.

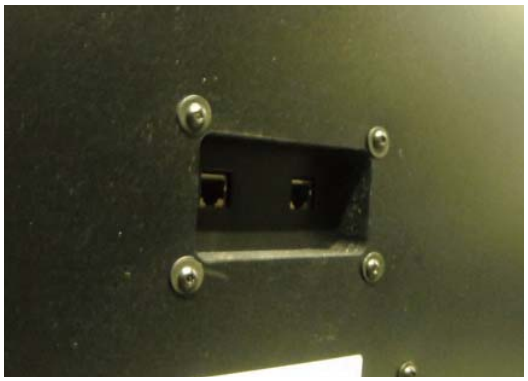

3 Remove the four Phillips pan-head screws (with flat and spring washers) (M3 x 6) and replace the Straight PC Board.

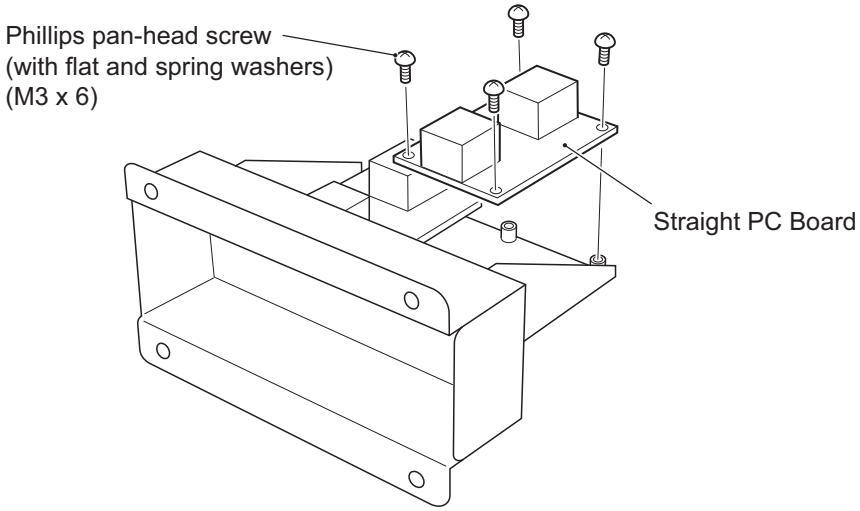

4 To reinstall, follow the removal sequence in reverse.

8-3-3 Cabinet (L), (R) Assys - To be conducted by a technician only -

(1) Removing and installing the control cover

- To protect the service staff and other people from an electric shock, accident and injury, and to prevent damage to the electrical circuitry of the machine, always turn off the power switch before conducting the described task.

1 Remove the four Torx bolts (M5 x 10) from each Assy and dismount the control cover.

* Note that a connector is connected on the rear side of the control cover.

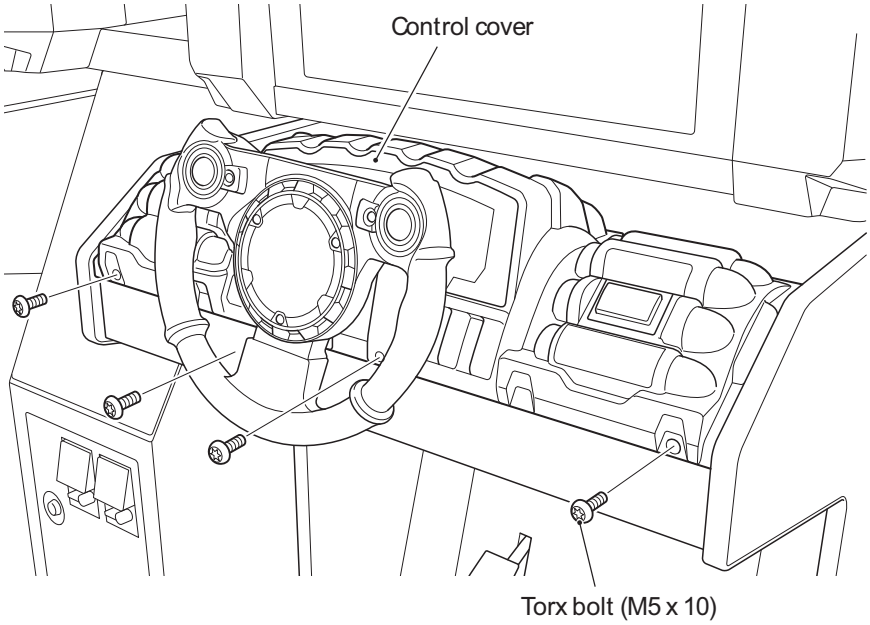

2 Disconnect the connector from the rear side of the control cover.

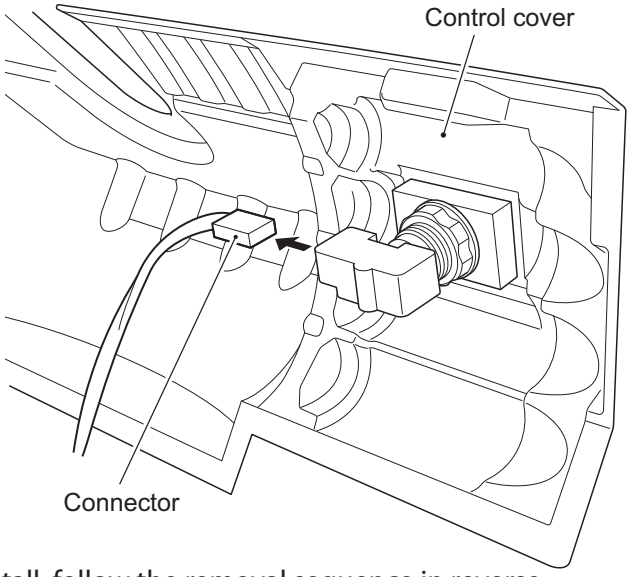

3 To reinstall, follow the removal sequence in reverse.

(2) Replacing the Vibration Stop button

- To protect the service staff and other people from an electric shock, accident and injury, and to prevent damage to the electrical circuitry of the machine, always turn off the power switch before conducting the described task.

1 Remove the control cover. (See "8-3-4 (1) Removing and installing the control cover.")

2 Turn the Vibration Stop button about 20° to the left and pull it out for replacement.

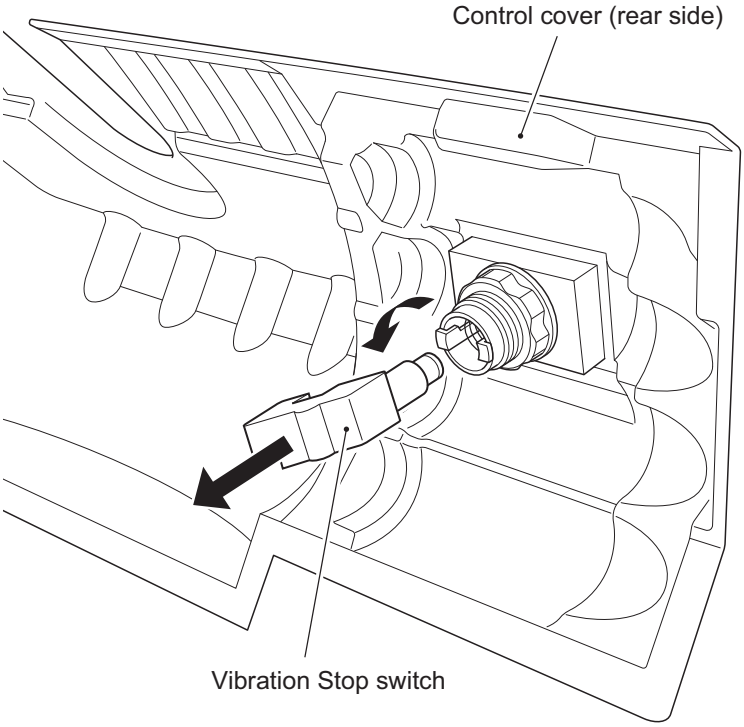

3 To reinstall, follow the removal sequence in reverse.

8-3-4 Seat Base Assy - To be conducted by a technician only -

(1) Replacing the pneumatic valve in the Seat Base Assy

- To protect the service staff and other people from an electric shock, accident and injury, and to prevent damage to the electrical circuitry of the machine, always turn off the power switch before conducting the described task.

1 Remove the two button-head bolts (M5 x 30), two flat washers (M5), three button-head bolts (M5 x 12) and three flat washers (M5), and dismount the floor cover.

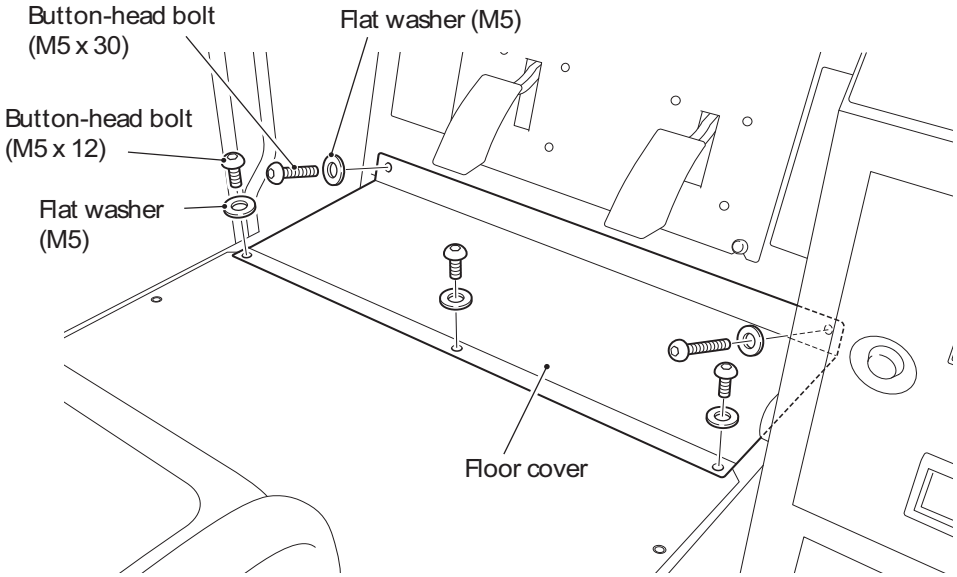

2 Remove the four button-head bolts , and dismount the seat front cover.

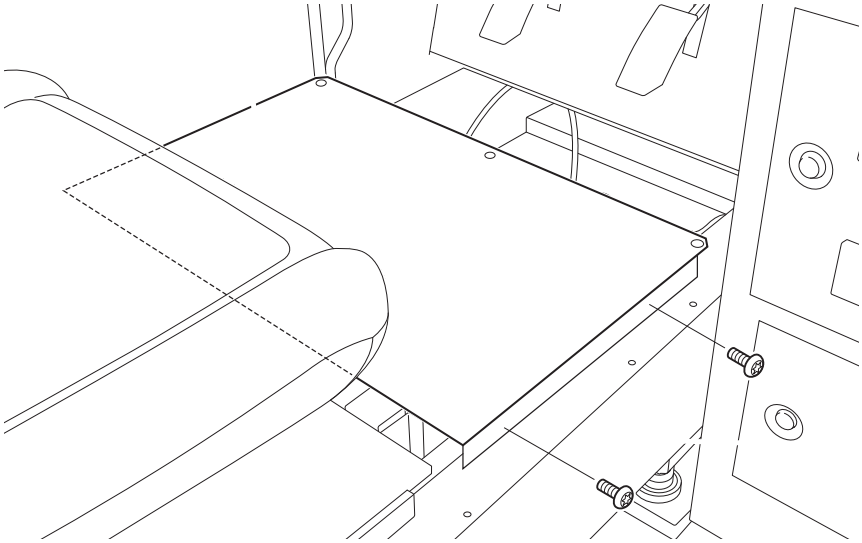

3 Disconnect the three air tubes from the pneumatic valve.

* Refer to the diagram below for the method of disconnecting air tubes.

4 Disconnect the right and left connectors.

5 Remove the two cap screws (M) (M3 x 25) and replace the pneumatic valve.

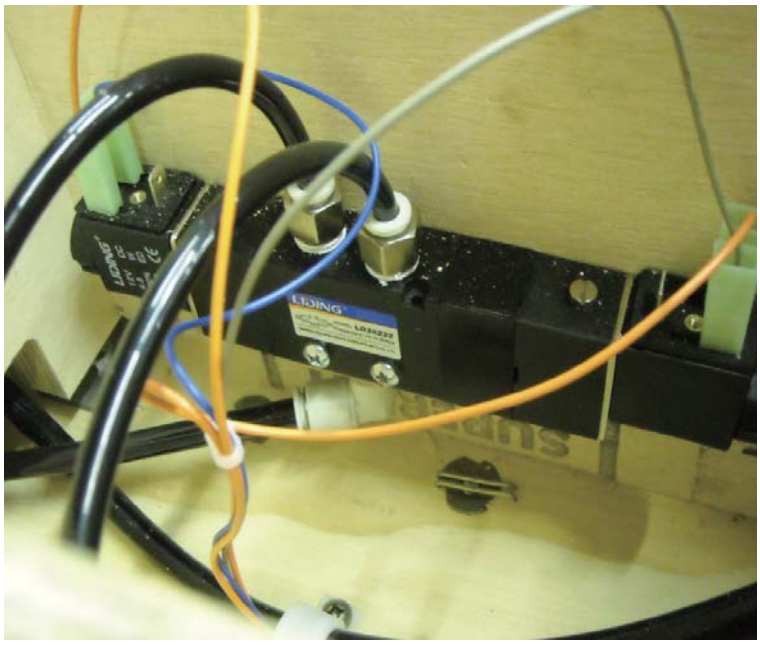

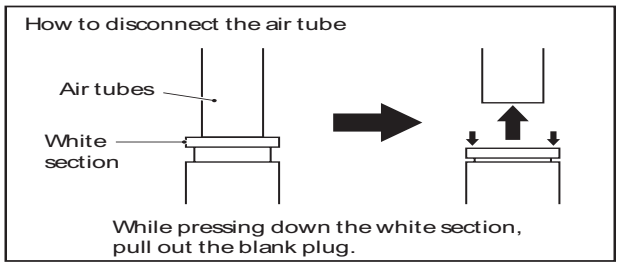

6 To reinstall, follow the removal sequence in reverse.

NOTICE

- When connecting the air tubes, be sure to insert the air tubes all the way for secure connection. If the air tubes are not securely attached, they can disconnect and disallow proper functioning of the machine.
- When connecting the connectors, check the tag to ensure correct connection of the right and left connectors.

8-3-5 Steering Assy - To be conducted by a technician only -

(1) Removing and installing the Steering Assy

- To protect the service staff and other people from an electric shock, accident and injury, and to prevent damage to the electrical circuitry of the machine, always turn off the power switch before conducting the described task.

1 Remove the control cover. (See "8-3-3 (1) Removing and installing the control cover.")

2 Remove the four Torx bolts (M5 x 35) and four flat washers (large, round) (M5), and dismount the control panel retainer.

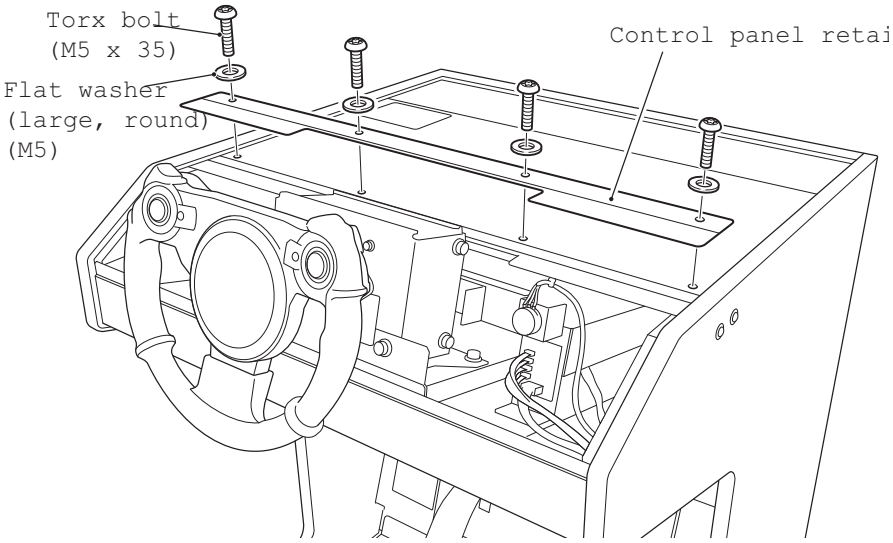

3 Remove the two Torx bolts (M5 x 35) and two flat washers (large, round) (M5), and dismount the cabinet panel.

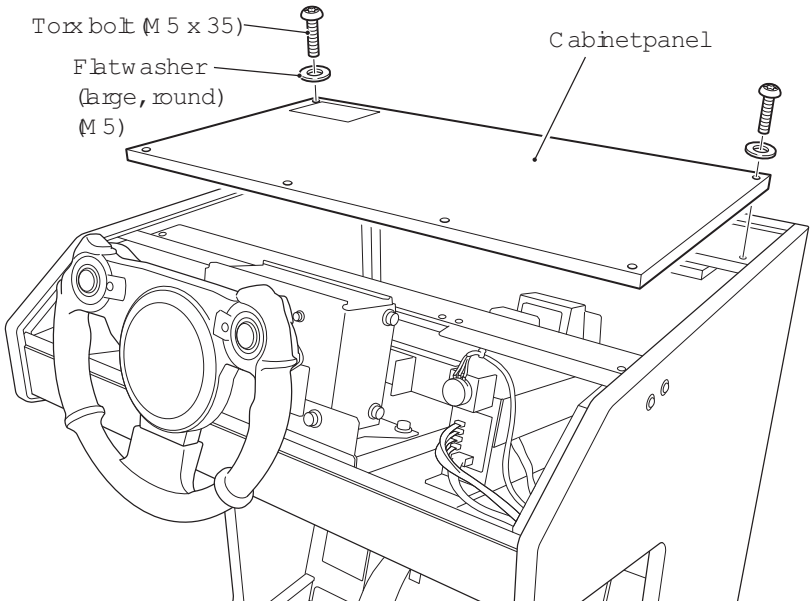

4 Remove the four Torx bolts (M5 x 25) and four flat washers (large, round) (M5), and dismount the cabinet frame.

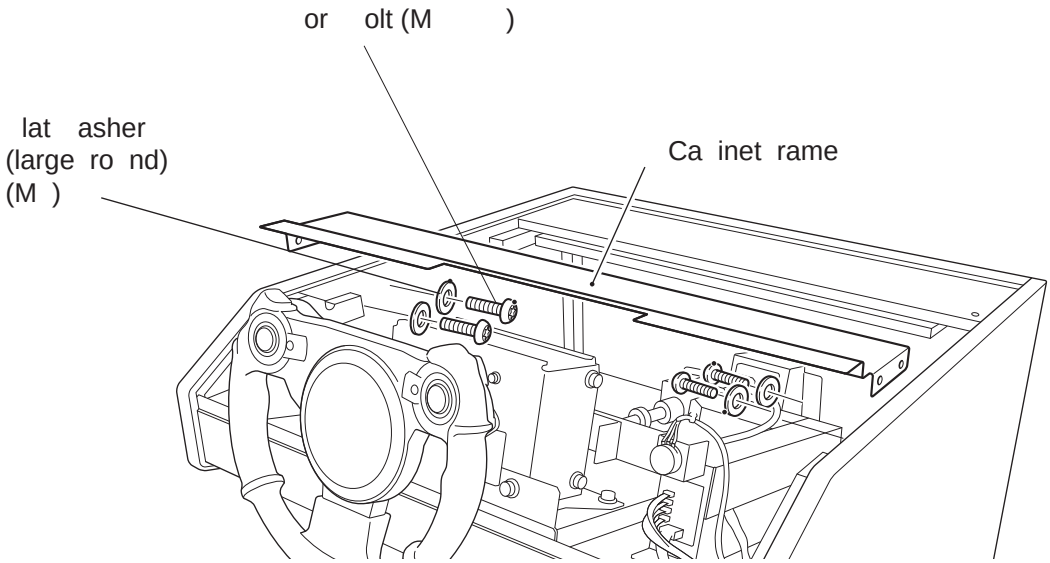

5 Disconnect the five connectors.

6 Remove the harness from the SWR PC Board.

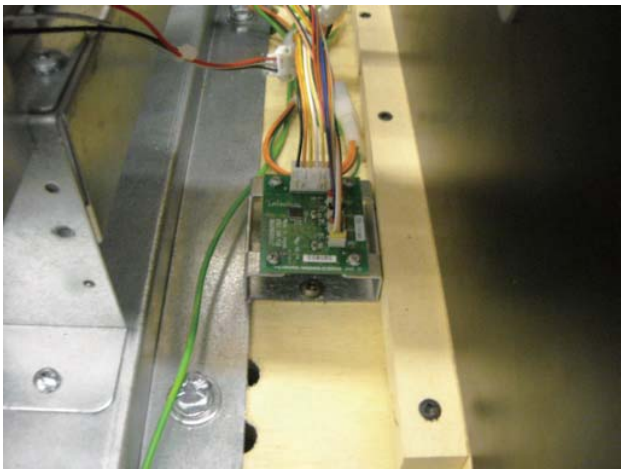

7 Loosen the three countersunk washer nuts (M4) and disengage the gears.

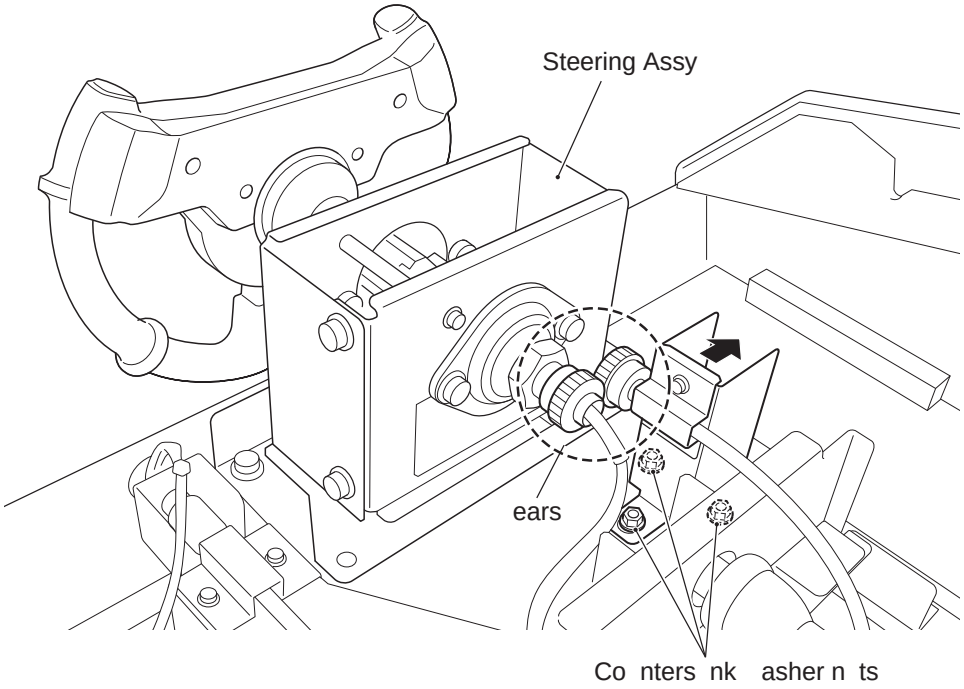

8 Remove the four flange-socket bolts (M8 x 16).

* To remove the two flange-socket bolts (M8 x 16) on the front side, rotate the steering wheel.

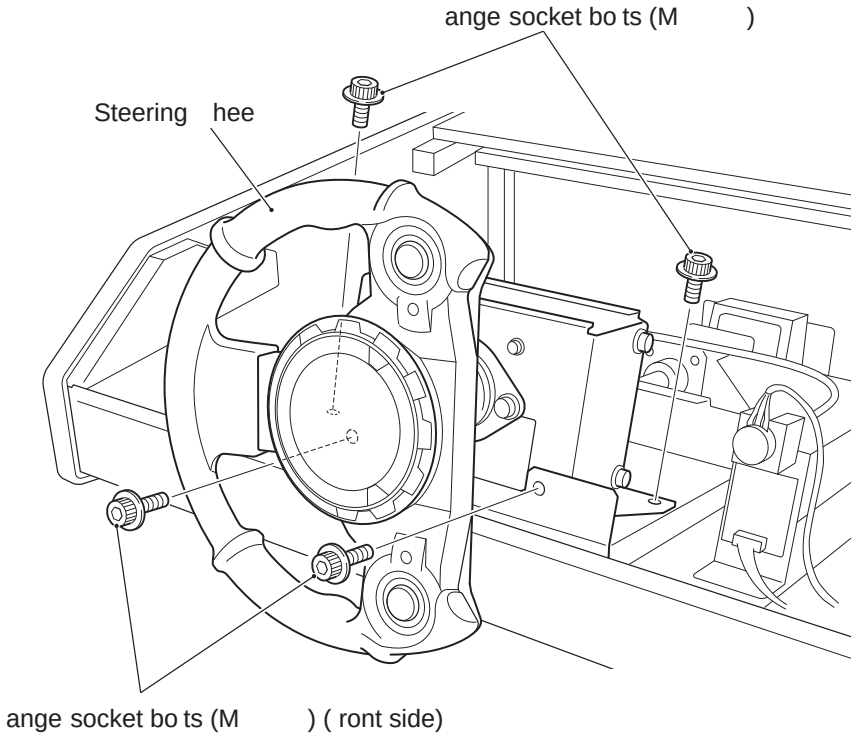

9 Dismount the Steering Assy.

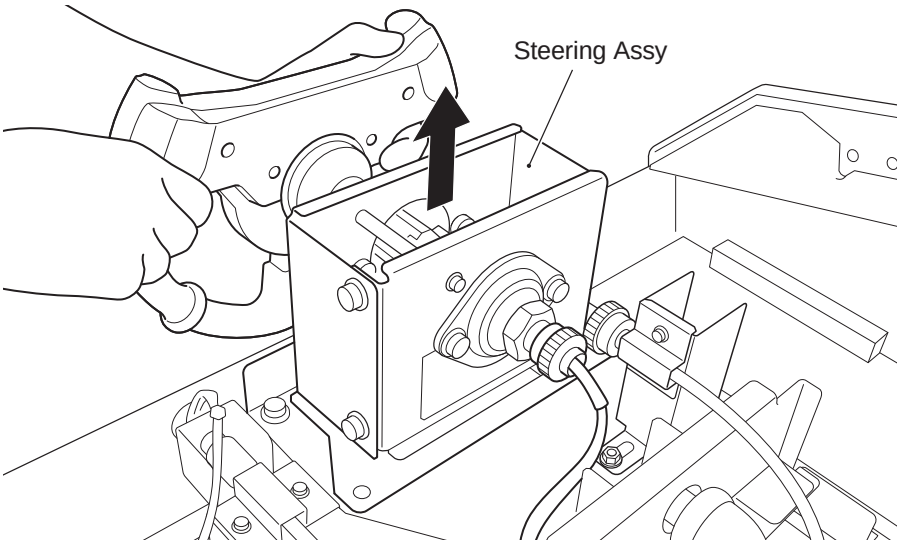

10 To reinstall, follow the removal sequence in reverse.

NOTICE

- When engaging the gears, make sure that the steering wheel is positioned in neutral position and the volume retaining screws are at the top, and then tighten the three countersunk washer nuts (M4) for secure installation.

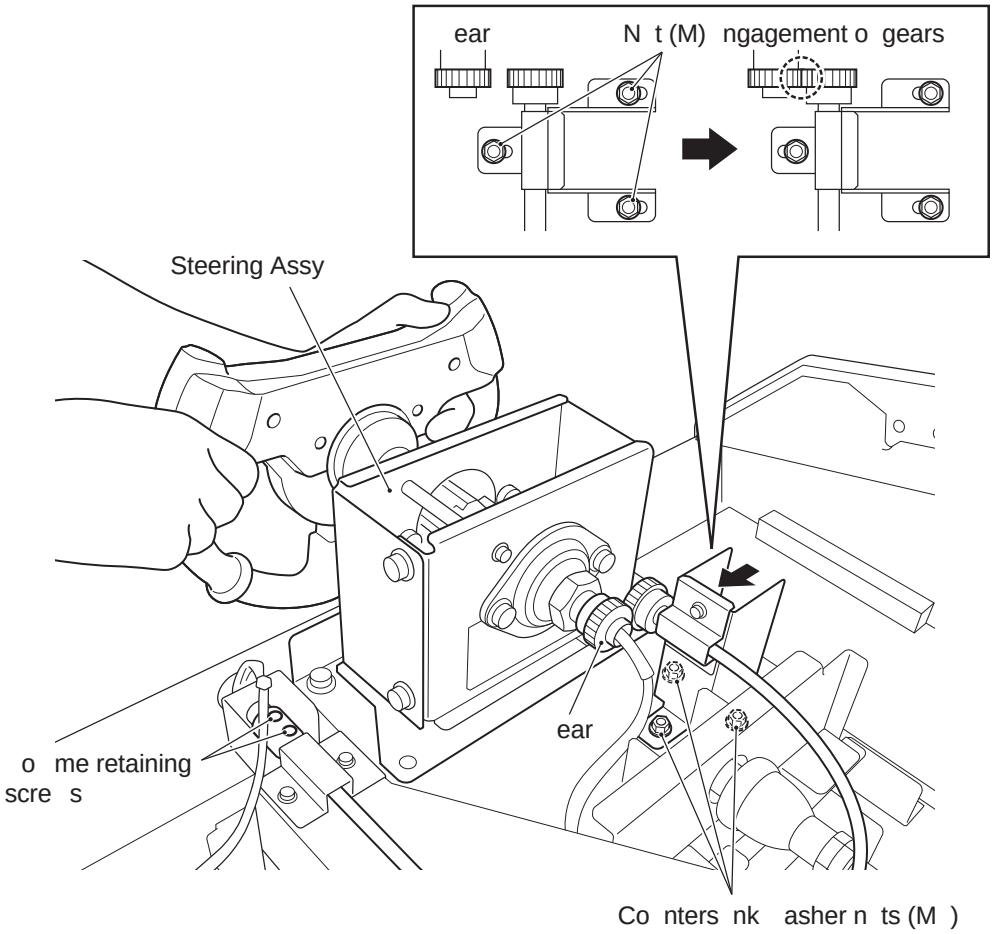

(2) Replacing the switch cover

- To protect the service staff and other people from an electric shock, accident and injury, and to prevent damage to the electrical circuitry of the machine, always turn off the power switch before conducting the described task.

1 Remove the five button-head bolts (M4 x 25) and three spacers (4 x 15), and dismount the emblem plate and switch cover.

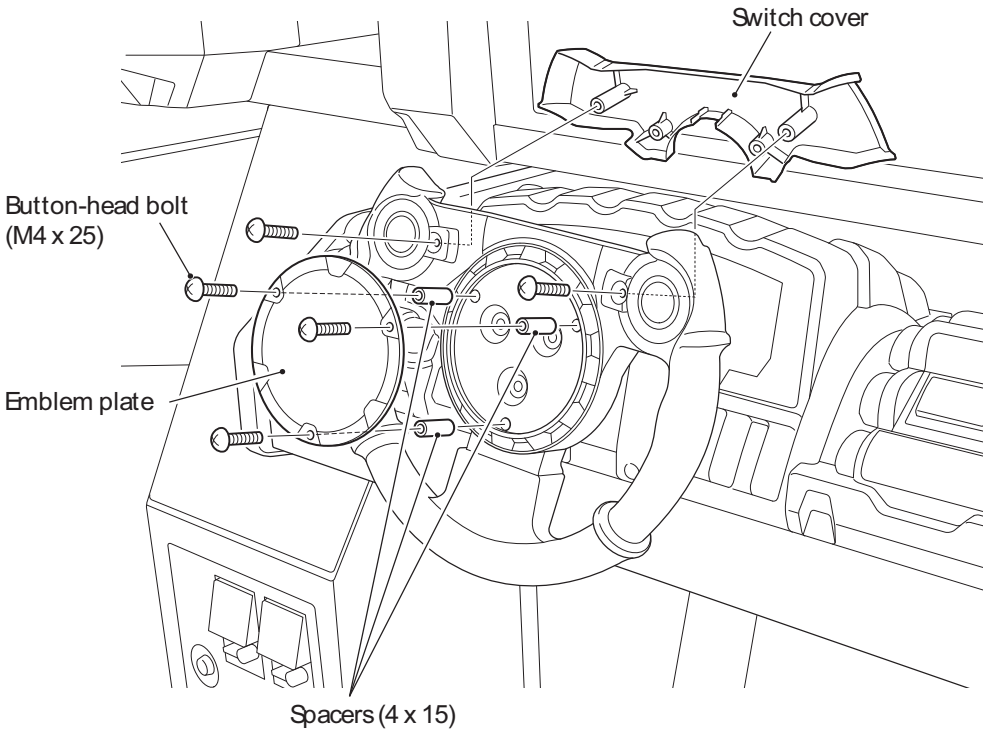

2 To reinstall, follow the removal sequence in reverse.

(3) Replacing the steering wheel

- To protect the service staff and other people from an electric shock, accident and injury, and to prevent damage to the electrical circuitry of the machine, always turn off the power switch before conducting the described task.

1. Remove the switch cover. (See "8-3-6 (2) Replacing the switch cover.")
2. Disengage the hook located on the rear side of the steering wheel, and disconnect the two connectors.
3. Remove the three hexagon-socket-head shoulder bolts (8 dia. x 12) (M6) and dismount the steering wheel.

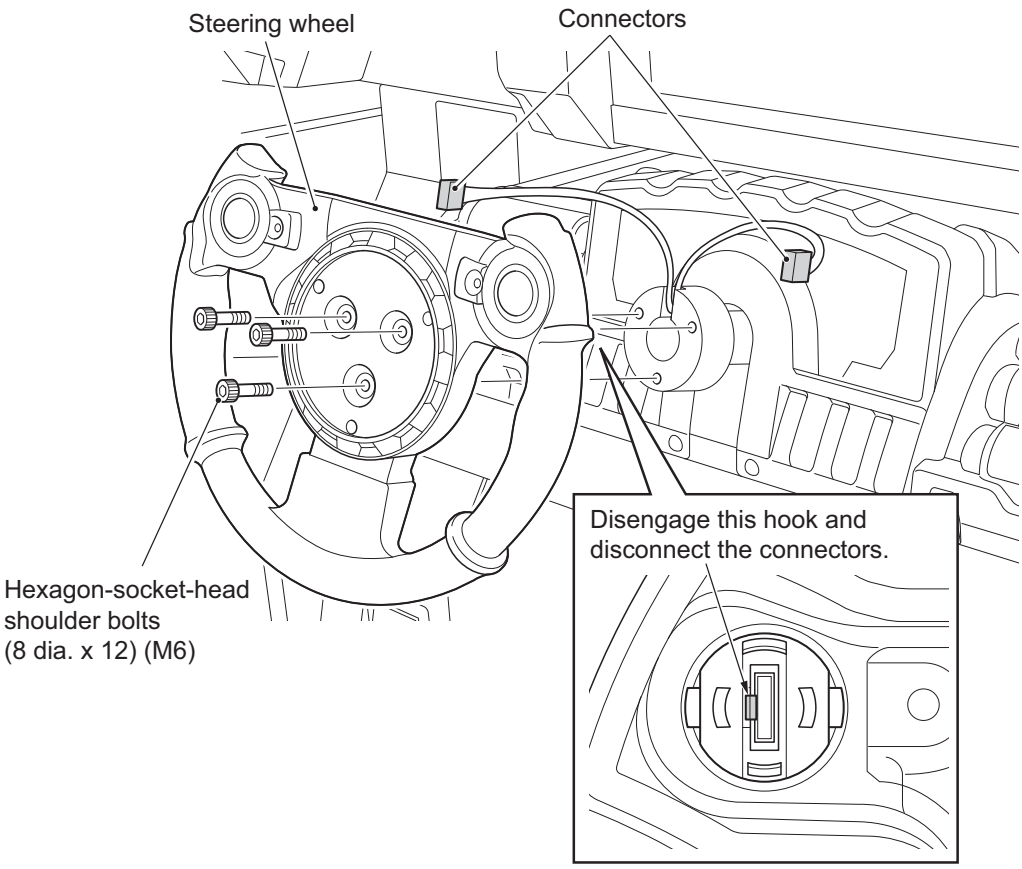

4. To reinstall, follow the removal sequence in reverse.

(4) Replacing the Fire button

- To protect the service staff and other people from an electric shock, accident and injury, and to prevent damage to the electrical circuitry of the machine, always turn off the power switch before conducting the described task.

1. Remove the switch cover. (See "8-3-6 (2) Replacing the switch cover.")
2. Disconnect the connector from the Fire button to be replaced.
3. While pressing the hooks, remove the Fore button and replace it.

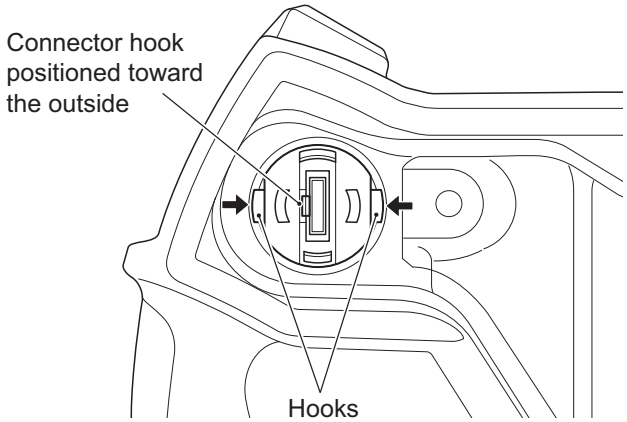

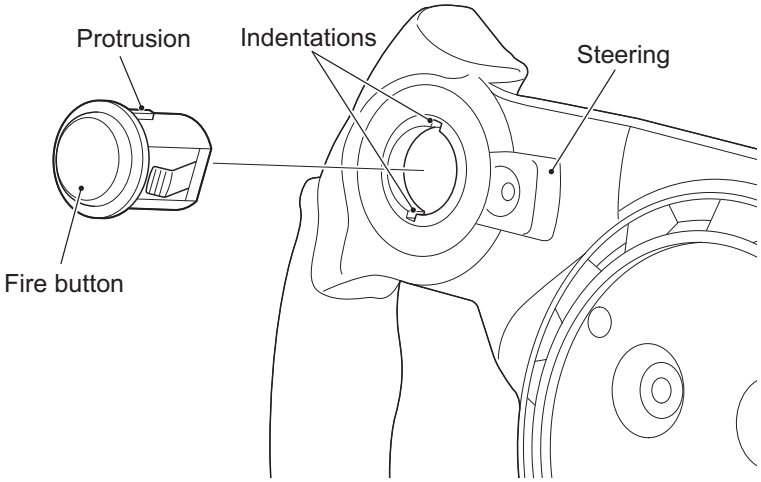

4. To reinstall, follow the removal sequence in reverse.

NOTICE

- When installing the Fire button, align the protrusions on the Fire button with the indentations on the steering. Also, make sure that the connector hook is positioned toward the outside.

8-3-6 Slide Unit Assy - To be conducted by a technician only -

(1) Replacing the volume in the Slide Unit Assy6

- To protect the service staff and other people from an electric shock, accident and injury, and to prevent damage to the electrical circuitry of the machine, always turn off the power switch before conducting the described task.

1 Remove the control cover. (See "8-3-3 (1) Removing and installing the control cover.")

2 Using an Allen wrench, loosen the one hexagon-socket set screw (M5 x 5) and dismount the volume bracket.

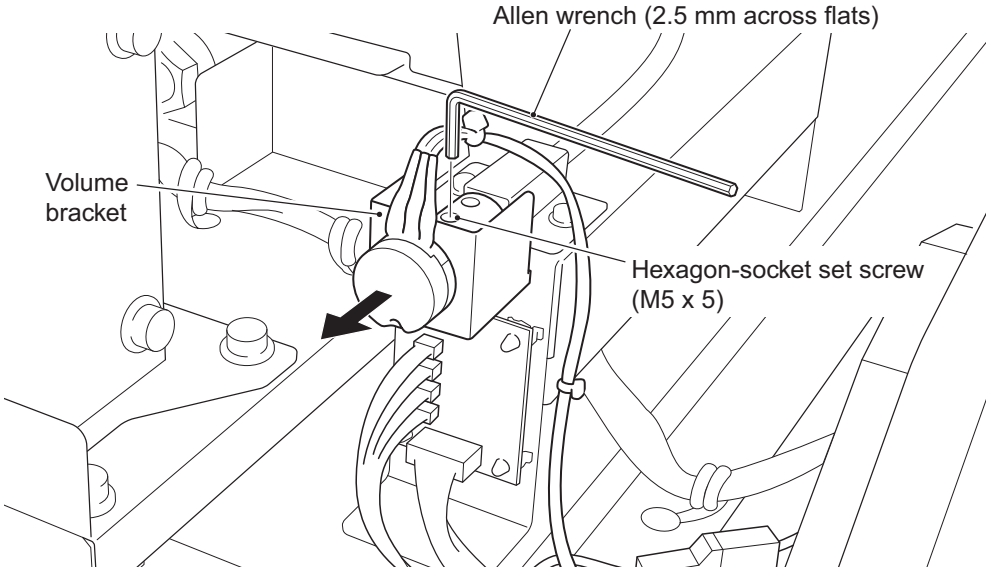

3 Dismount the volume from the volume bracket and replace it.

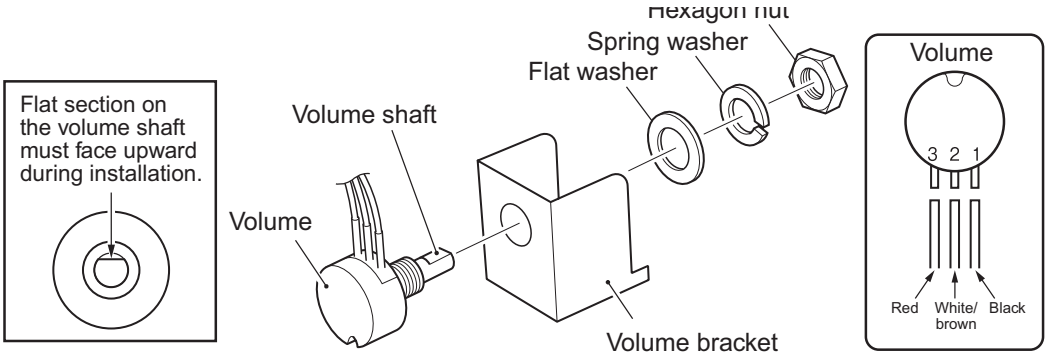

4 To reinstall, follow the removal sequence in reverse.

NOTICE

- When installing the volume, align the flat section on the volume shaft with the position of the hexagon-socket set screw.
- After the replacement, be sure to initialize the volume. (See "7-5-1 Initializing volumes.")

(2) Replacing the pneumatic valve in the Slide Unit Assy

- To protect the service staff and other people from an electric shock, accident and injury, and to prevent damage to the electrical circuitry of the machine, always turn off the power switch before conducting the described task.

1 Remove the cabinet panel. (See "8-3-5 (1) Removing and installing the Steering Assy" 1 through 3.)

2 Disconnect the three air tubes from the pneumatic valve.

* Refer to the diagram below for the method of disconnecting air tubes.

3 Disconnect the right and left connectors.

4 Remove the two cap screws (M) (M3 x 25) and replace the pneumatic valve.

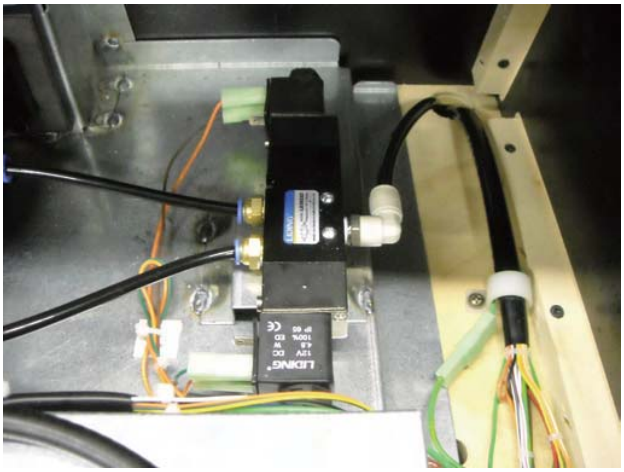

How to disconnect the air tube

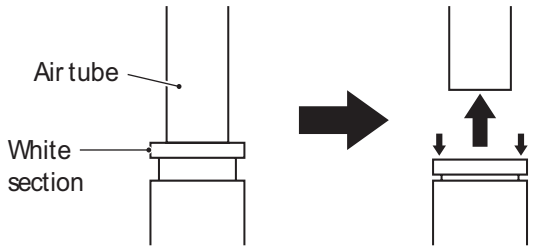

While pressing down the white section, pull out the blank plug.

5 To reinstall, follow the removal sequence in reverse.

NOTICE

- When connecting the air tubes, be sure to insert the air tubes all the way for secure connection. If the air tubes are not securely attached, they can disconnect and disallow proper functioning of the machine.
- When connecting the connectors, check the tag to ensure correct connection of the right and left connectors.

(3) Replacing the SWR PC Board

- To protect the service staff and other people from an electric shock, accident and injury, and to prevent damage to the electrical circuitry of the machine, always turn off the power switch before conducting the described task.

NOTICE

- The PC board can be easily damaged by static electricity. If the PC board is handled by a person charged with static electricity, parts mounted on the PC board can become damaged. Before touching the PC board, be sure to remove static electricity from your body by touching a grounded metal.

1 Remove the control cover. (See "8-3-4 (1) Removing and installing the control cover.")

2 Disconnect the five connectors.

3 replace the SWR PC Board.

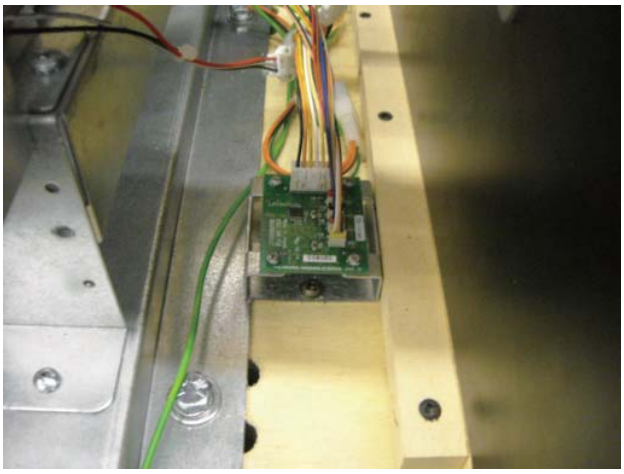

4 To reinstall, follow the removal sequence in reverse.

8-3-7 Pedal A Assy - To be conducted by a technician only -

(1) Removing and installing the Pedal A Assy

NOTICE

- To prevent damage to the electrical circuitry, be sure to turn off the power switch before conducting the described task.

1 Remove the top two flange-socket bolts (M8 x 30) and loosen the bottom two flange-socket bolts (M8 x 30).

2 Lift the pedal plate slightly and pull it toward the front.

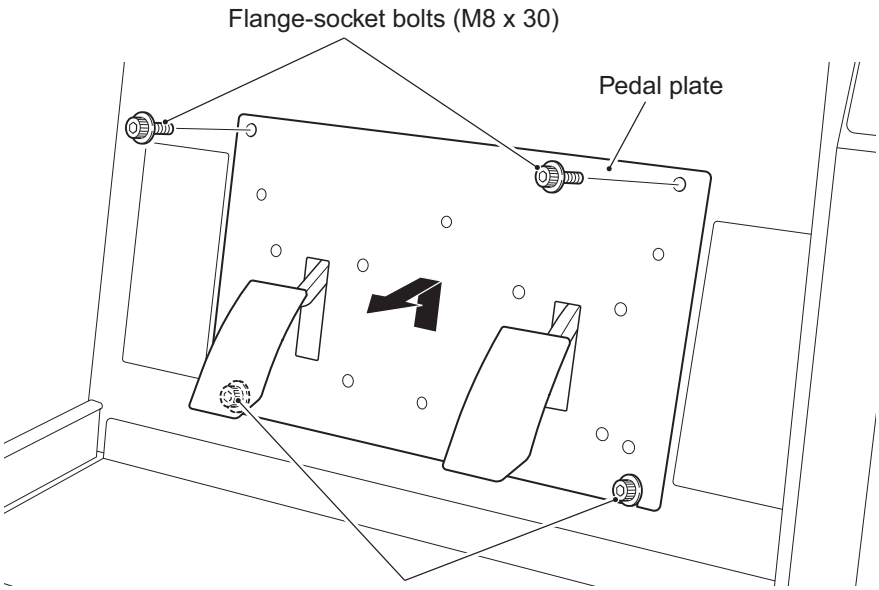

3 Disconnect the two connectors and dismount the pedal plate.

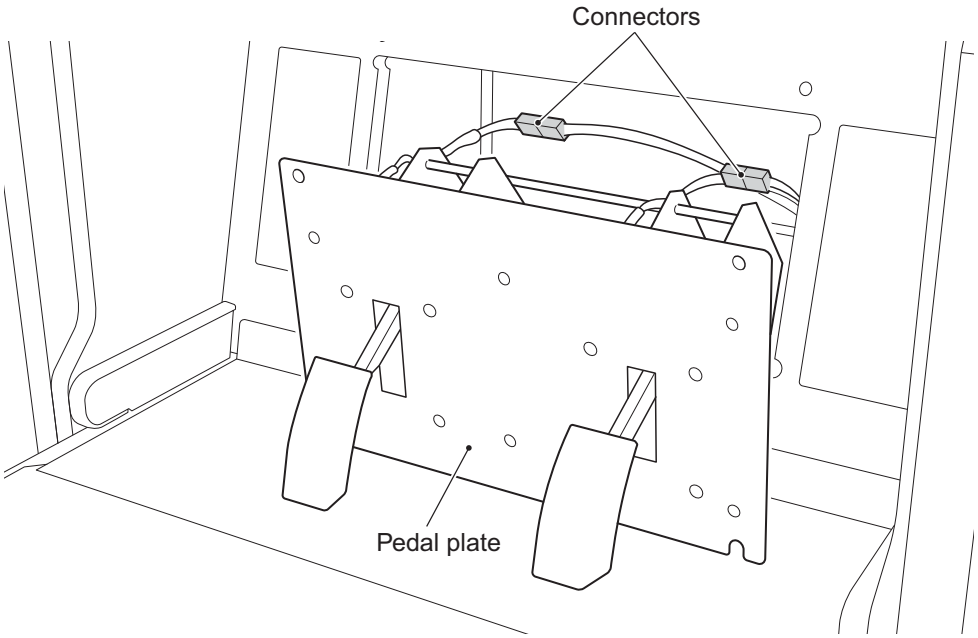

4 Remove the four countersunk washer nuts (M6) and dismount the Pedal A Assy.

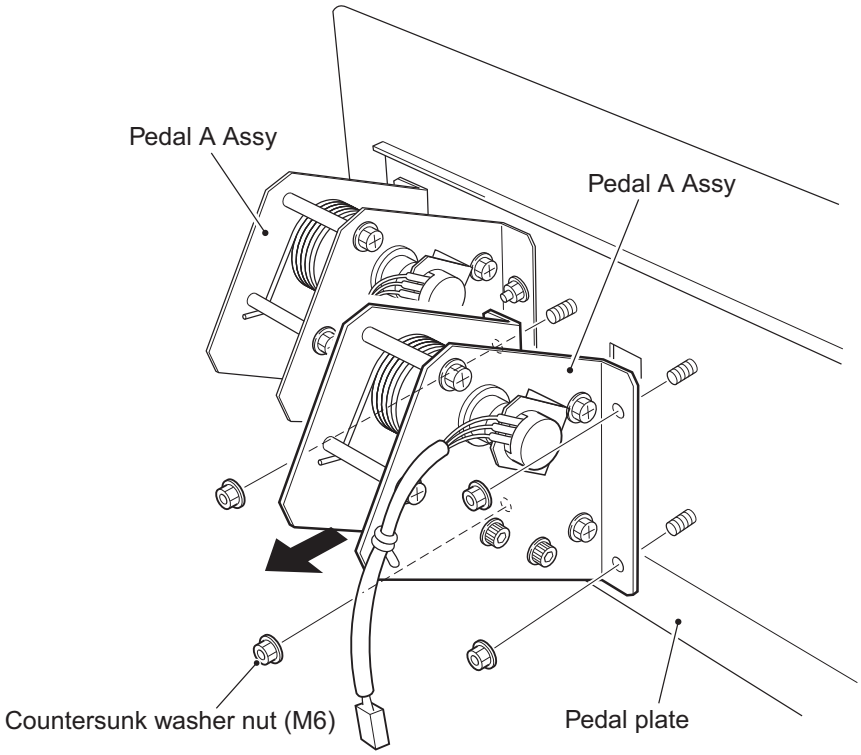

5 Lay the Pedal A Assy on its side and detach it from the pedal plate.

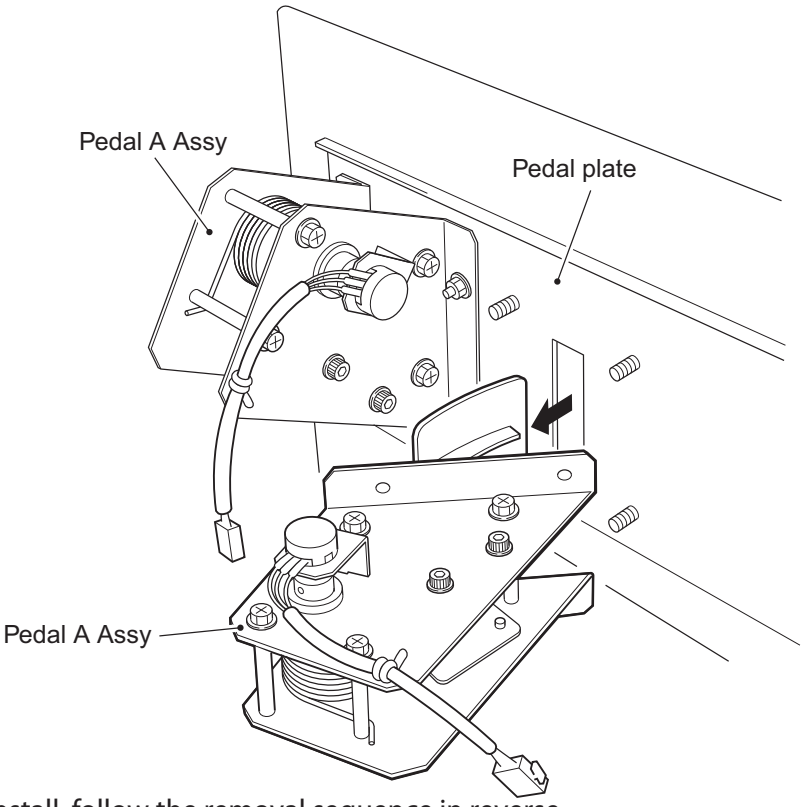

6 To reinstall, follow the removal sequence in reverse.

NOTICE

- When removing or reinstalling the Pedal A Assy, be careful not to hit the volume.

(2) Replacing the volume in the Pedal A Assy

NOTICE

- To prevent damage to the electrical circuitry, be sure to turn off the power switch before conducting the described task.

1 Remove the Pedal A Assy. (See "8-3-8 (1) Removing and installing the Pedal A Assy.")

2 Remove the countersunk washer nut, disconnect the ground lead, detach the cord clip from the harness, and disconnect the connector from the volume to be replaced.

3 Using an Allen wrench, loosen the one hexagon-socket set screw (M4 x 8) and dismount the volume together with the volume bracket.

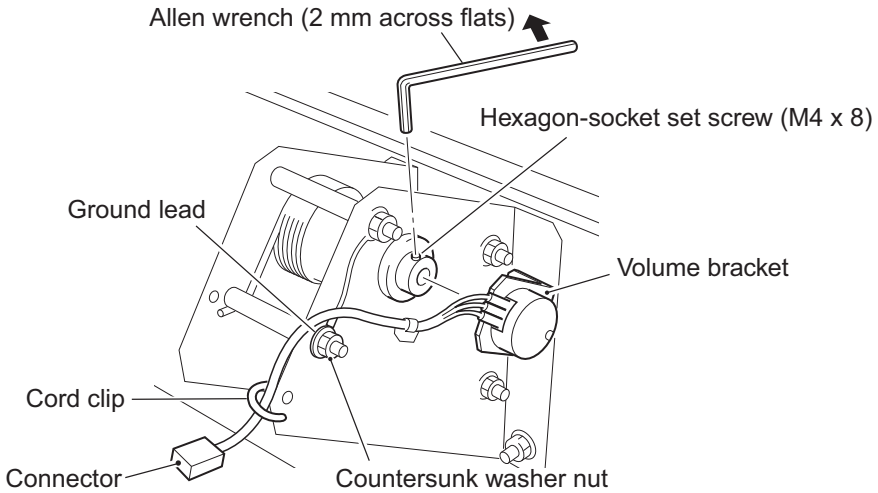

4 Dismount the volume from the volume bracket.

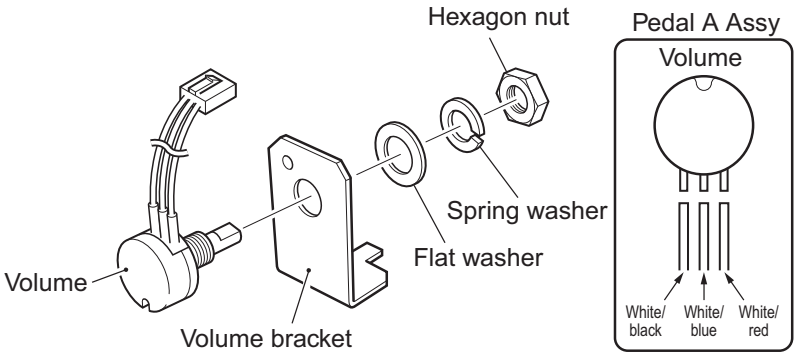

5 Replace the volume.

6 To reinstall, follow the removal sequence in reverse.

NOTICE

- When installing the volume, align the flat section on the volume shaft with the position of the hexagon-socket set screw.

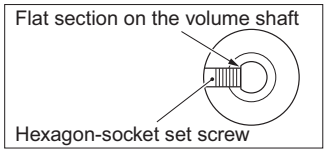

- After the replacement, be sure to initialize the volume. (See "7-5-1 Initializing volumes.")

(3) Replacing the cushion

NOTICE

- To prevent damage to the electrical circuitry, be sure to turn off the power switch before conducting the described task.

1 Remove the Pedal A Assy. (See "8-3-8 (1) Removing and installing the Pedal A Assy.")

2 Remove the hexagon-head bolt (M6 x 60) and countersunk washer nut, and detach the cushion and spacer.

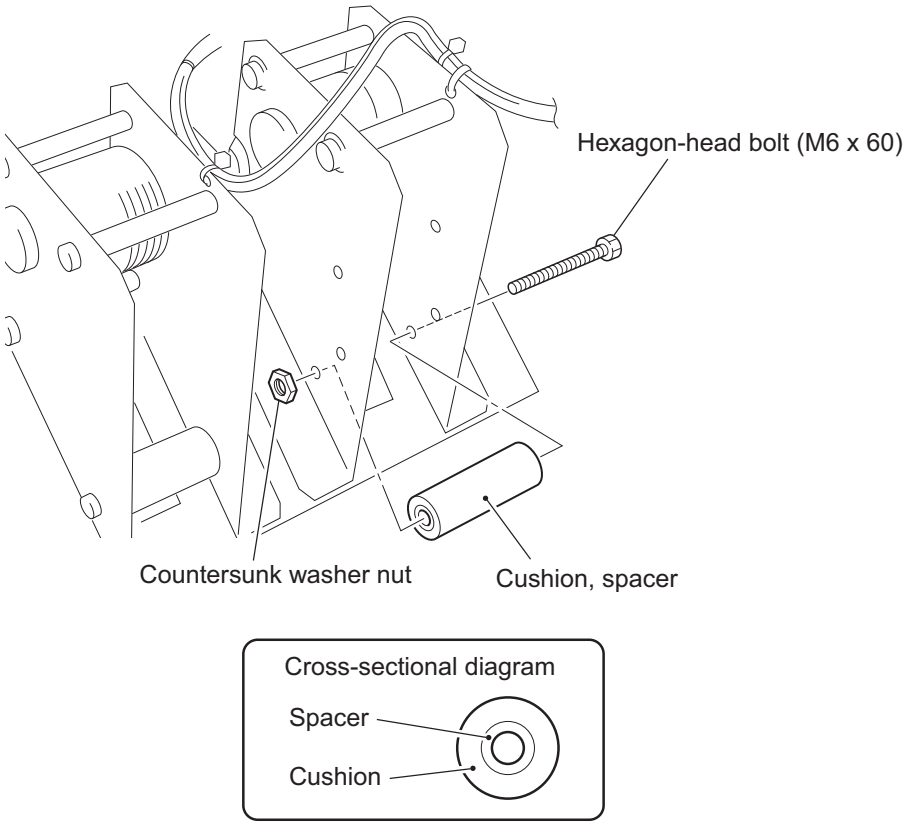

3 Replace the cushion

4 To reinstall, follow the removal sequence in reverse.

NOTES

9. DISCARDING THE MACHINE

- The machine must be collected, transported and discarded in accordance with the local laws and regulations.
- When entrusting a third party to collect, transport and discard the machine, be sure to use specialist companies to perform each task.

10. PARTS LISTS

10-1 Monitor Base Assy

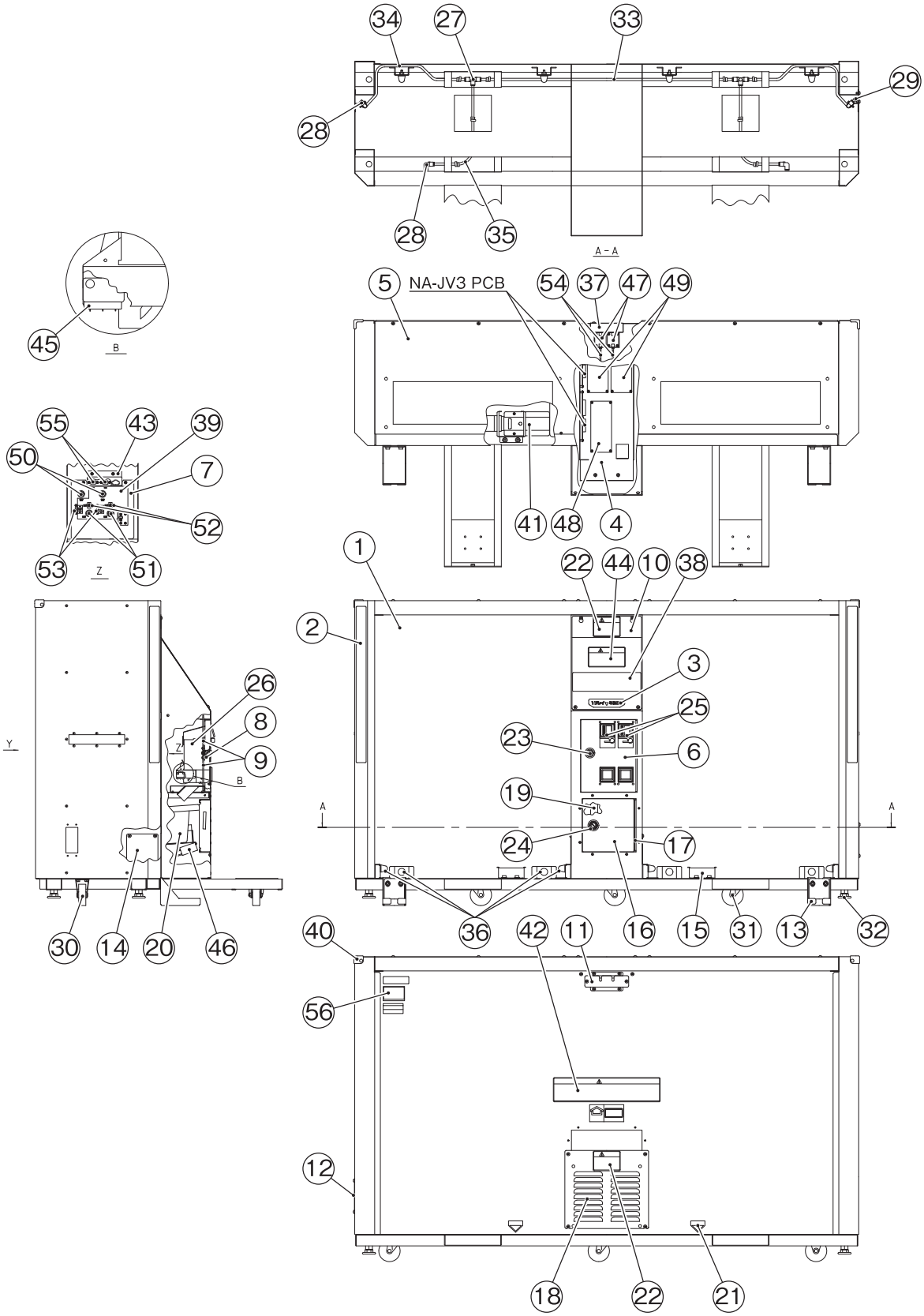

No.	Name	Qty.	Type and rating	Part No.
6	25C MECH ENTRY W/OBV &HARN BLK	1		VG83-10635-00
7	BRACKET, SERVICE PANEL	1		VG10-06881-00
12	SIDE COVER PLATE	1		TA10-12884-00
13	ADJUSTER HOLDER	4		TA10-12885-00
21	Fork position sticker	2		VG40-06882-00
22	Warning sticker Maintenance (B) (EXP)	2		VG44-12423-00
27	JOINT, CHEESE # 8	2	GWT8-0	TA92-12837-00
28	JOINT, ELBOW # 8 (PLH)	4	GWL8-0	TA92-12839-00
29	1/4 BRASS HEX HEAD PLUG 0300	1	GWP8-B	TA92-12898-00
31	CASTER, SWIVEL 2-1/2", # 2G017	4	STC-75NM	VG22-02058-00
32	LEVELER, 5/8"-11x3 1/2"	4	M16X75	VG20-07415-14
33	TUBE,BLK,8mm OD,51"LG SOFT NYL	1	F-1508 L=900	TA92-12895-51
34	TUBE,BLK,8mm OD,28"LG SOFT NYL	2	F-1508 L=620	TA92-12895-28
35	TUBE,BLK,8mm OD,24"LG SOFT NYL	2	F-1508 L=450	TA92-12895-24
36	RUBBER STOPPER	12	RI-25HD	TA96-12848-00
38	DECAL, FRONT CENTER	1		TA40-12792-00
42	Warning sticker Forklift (EXP)	1		461-656
44	DECAL, CAUTION PLAYER	1		NN40-12443-00
47	STRAIGHT PCB.	2		TA15-12849-00
48	POWER, SUPPLY, SWITCHING	1	OZP-120-12/15-J00	VG88-10064-00
54	CABLE,LAN,7FT,LINK,SHIELDED	2	CAT5S-S-L1500	VG50-11136-07
57	TRANFORMER TANK (UK-ONLY)	1		VG56-12951-00

10-2 Monitor (L), (R) Assy

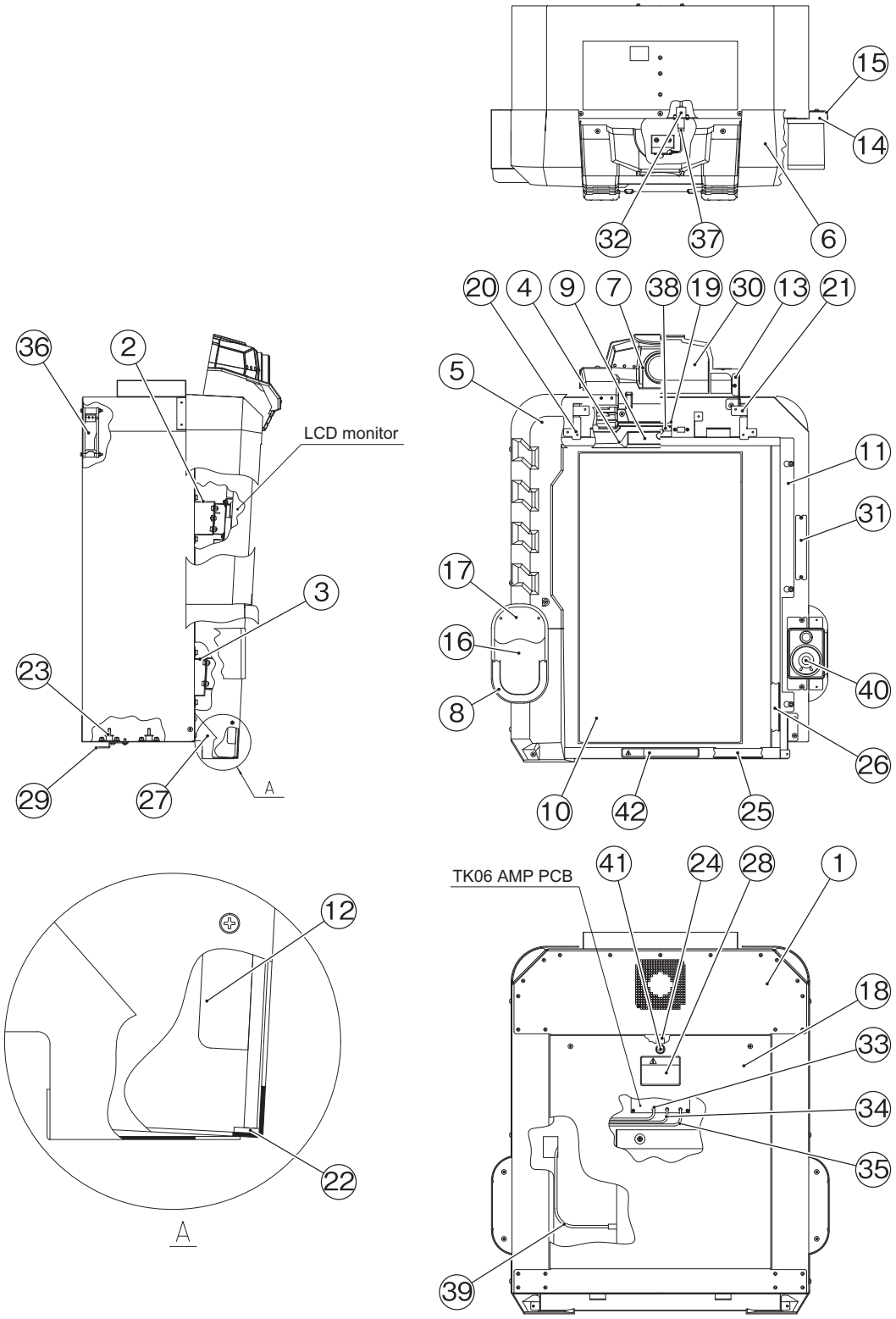

No.	Name	Qty.	Type and rating	Part No.
4	Monitor mask (C)	1		TA90-12827-00
5	Monitor mask (L)	1		TA90-12829-00
6	Monitor mask (R)	1		TA90-12829-01
8	Speaker bezel	2		TA90-12850-00
9	Namcam panel (EXP)	1		TA40-12806-00
10	Monitor glass	1		TA99-12851-00
16	Speaker Grill	2		TA10-12852-00
17	Speaker mask B	2		TA97-12853-00
19	Camera stay	1		TA10-12854-00
20	Top stay (L)	1		TA10-12855-00
21	Top stay (R)	1		TA10-12856-00
23	Vibration-isolation rubber	4	RB-20	RM96-12602-00
28	Warning sticker Maintenance (B) (EXP)	1		VG44-12423-00
33	3.5-mm stereo-plug cable	1		RB50-11497-00
34	3.5-mm stereo-plug cable	1		RB50-11497-00
35	3.5-mm stereo-plug cable	1		RB50-11497-00
36	AC fan motor	1		VG55-07827-00
37	USB (A) -ZHR5 conversion cable	1	USB-A-ZHR5-L200	007-810
38	Namcam 3 (camera)	1	KBCR-M05VU-TMEL22	TA37-12857-00
40	Speaker	2	TPS-370	TA54-12859-00
42	Caution sticker Hypersensitivity to Light (H) (EXP)	1		VG44-07943-00

10-3 Cord Box Assy

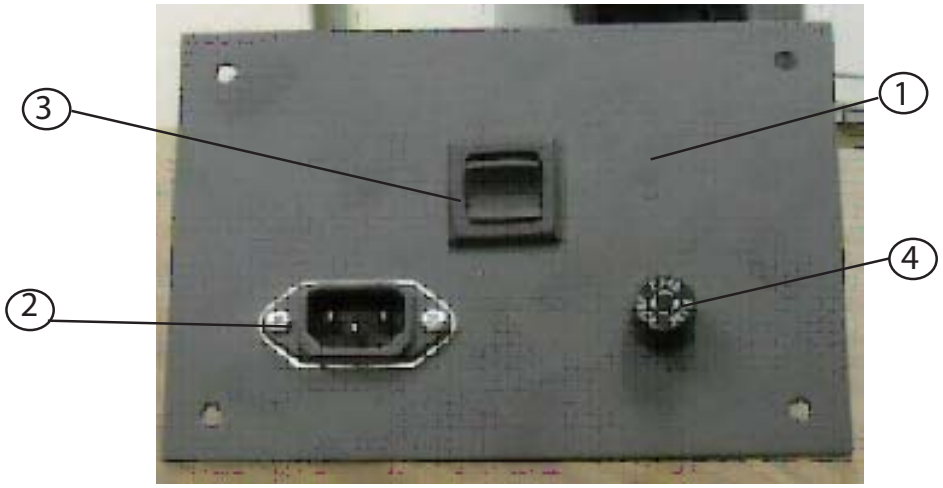

No.	Name	Qty.	Type and rating	Part No.
1	A.C. PLATE,DETACH CORD	1		VG10-09494-00
2	FILTER, EMI, 10A, PANEL MOUNT	1		VG78-07695-00
3	SWITCH, ROCKER, DPST	1		VG53-04683-00
4	PANEL MOUNT FUSEHOLDER	1		VG78-12950-00

10-4 Rack Assy

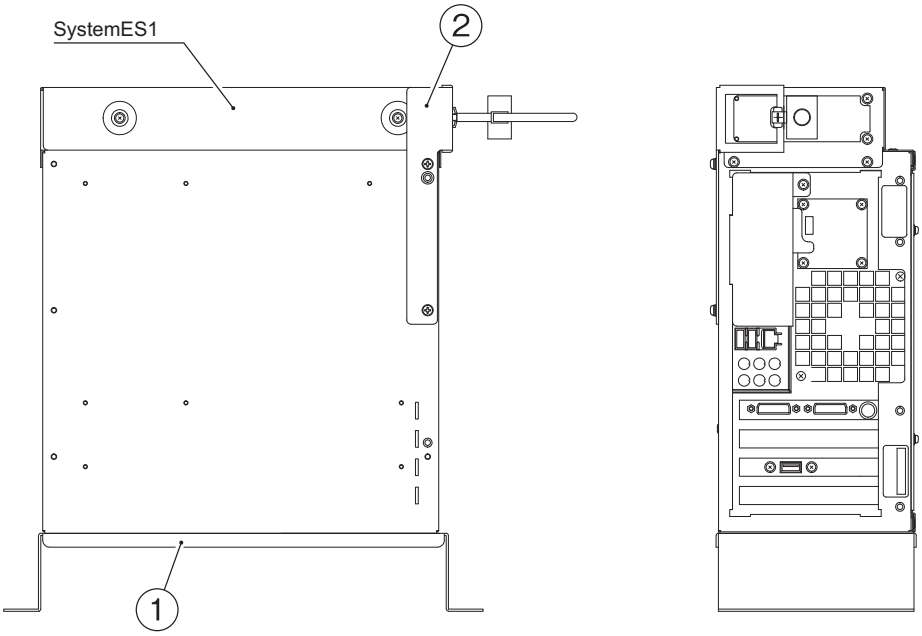

No.	Name	Qty.	Type and rating	Part No.
1	RACK TANK GAME.	1		TA05-12900-00
				Repair Only

10-5 Signboard Assy

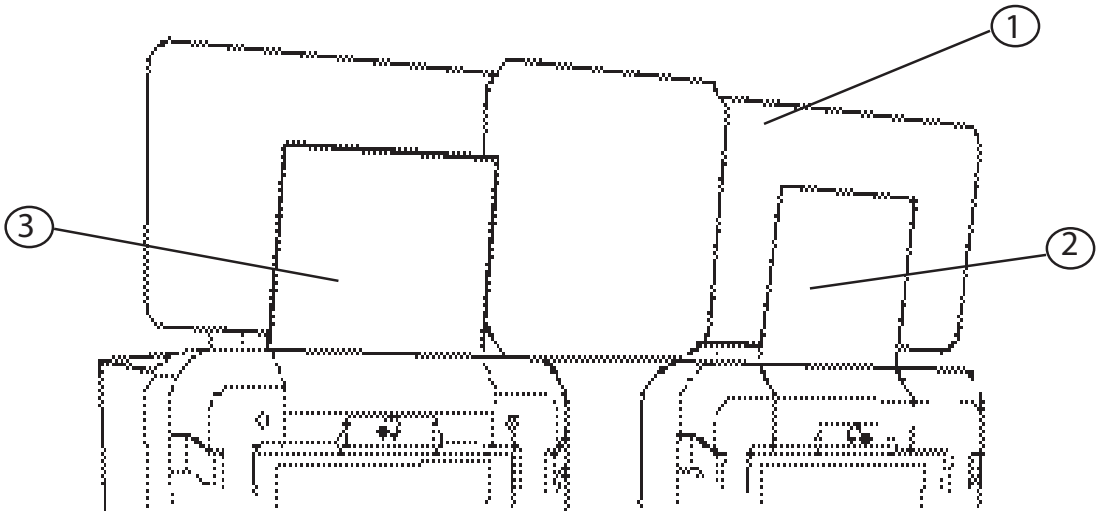

No.	Name	Qty.	Type and rating	Part No.
1	MARQUEE, REAR PANEL	1		TA40-12820-00
2	MARQUEE, RIGHT PANEL	1		TA40-12820-03
3	MARQUEE, LEFT PANEL	1		TA40-12820-02

10-6 Seat (L), (R) Assy

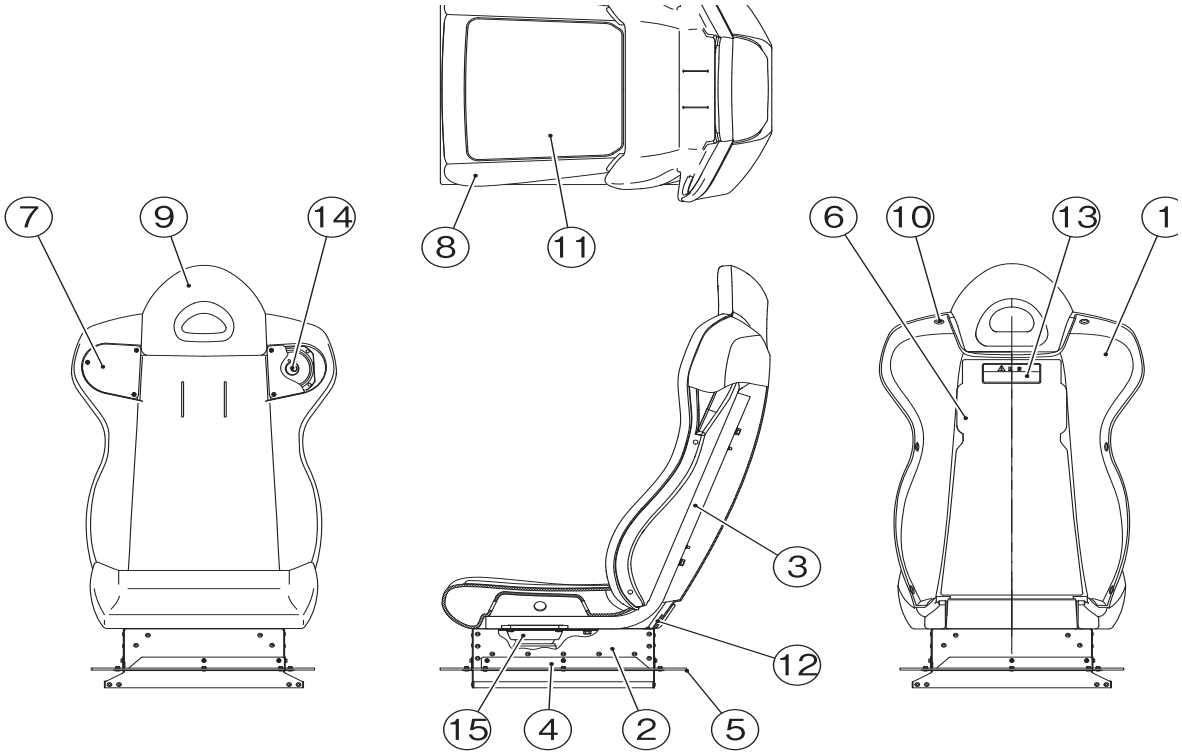

No.	Name	Qty.	Type and rating	Part No.
1	MOLDED SEAT (YEL)	1		TA90-12831-00
5	Slide cover	2		TA95-12872-00
7	Seat speaker port	2		TA10-12832-00
14	Speaker	2		VG54-11592-00
15	Woofer	1		VG54-11590-00
16	Woofer cover plate.	1		TA10-12833-00
17	Seat Slide Assy.	1		R505-09677-00
18	Woofer Plate decal (RED)	1		TA40-12795-00
19	Woofer Plate decal (BLUE)	1		TA40-12795-01
21	Seat cover decal (LT-RED)	1		TA40-12807-00
22	Seat cover decal (RT-RED)	1		TA40-12807-01
23	Seat cover decal (LT-BLUE)	1		TA40-12808-00
24	Seat cover decal (RT-BLUE)	1		TA40-12808-01

10-7 Cabinet (L), (R) Assy

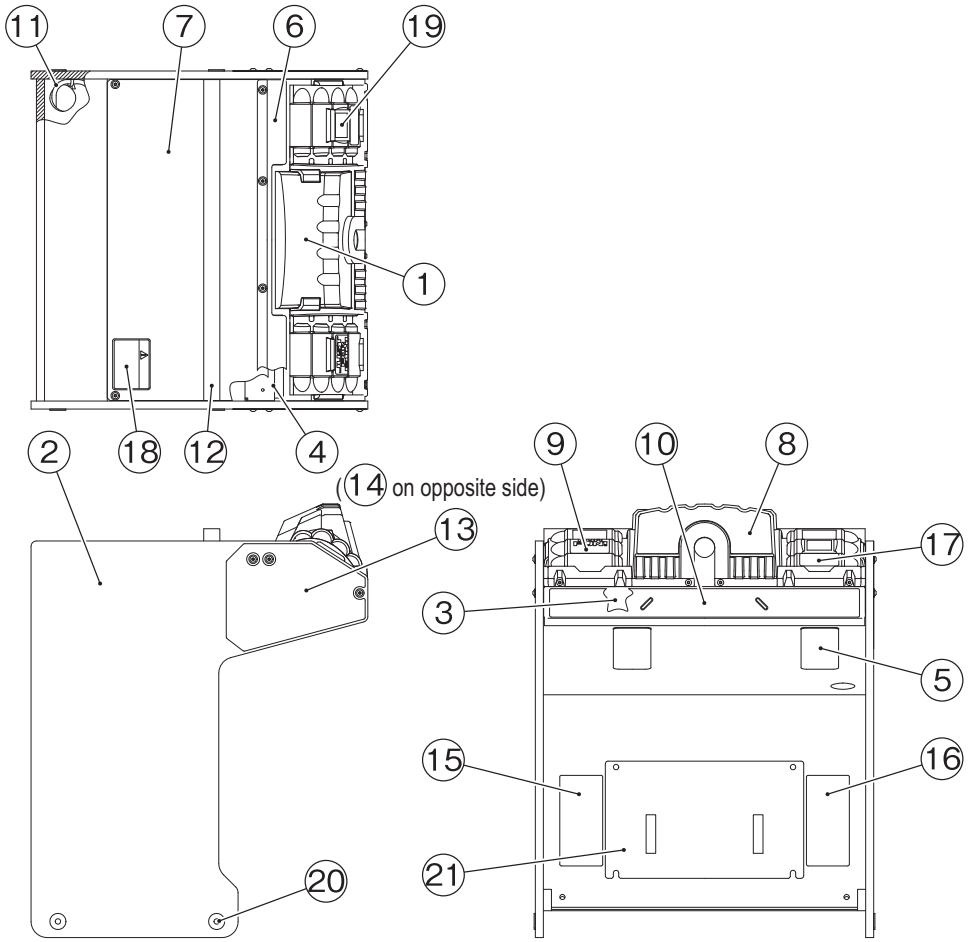

No.	Name	Qty.	Type and rating	Part No.
1	CONTROL PANEL, COVER	1		TA90-12826-00
2	CABINET, STEERING WHEEL ASSY.	1		TA63-12887-00
3	CONTROL PANEL PLATE	1		TA10-12860-00
4	CABINET FRAME	1		TA10-12861-00
5	SLIDE BRACKET	2		TA10-12862-00
6	CONTROL PANEL RETAINER	1		TA10-12863-00
7	CABINET COVER PANEL	1		TA63-12888-00
8	DECAL, CONTROL PANEL	1		TA40-12796-00
9	DECAL, MAGAZINE - LEFT	1		TA40-12797-00
10	DECAL, STEERING BOX - RED	1	Cabinet (L) Assy	TA40-12798-00
	DECAL, STEERING BOX - BLUE	1	Cabinet (R) Assy	TA40-12798-01
11	TUBE,BLK,8mm OD,43"LG SOFT NYL	1	F-1508 L=1100	TA92-12895-43
12	SPACER CUSHION	1		TA96-12864-00
13	DECAL, CABINET LEFT	1		TA40-12799-00
14	DECAL, CABINET RIGHT	1		TA40-12799-01
15	DECAL, PEDAL REVERSE	1		TA40-12800-00
16	DECAL, PEDAL FORWARD	1		TA40-12800-01
17	DECAL, STOP	1		TA40-12801-00
18	LABEL, WARNING HIGH VOLTAGE	1		VG44-12423-00
19	PUSH BTN,W/MICRO SWITCH,ELLUM	1	OBSA-45UK-R-1FLED-R-12V	VG80-12946-00
21	PEDAL BASE (TANK)	1		TA10-12865-00

10-8 Seat Base Assy

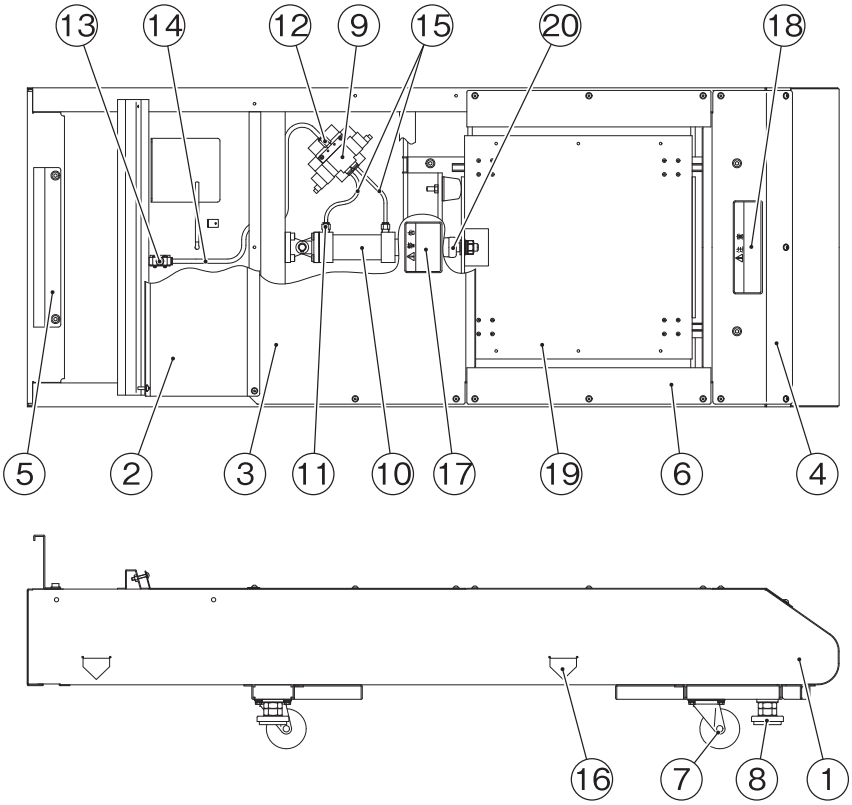

No.	Name	Qty.	Type and rating	Part No.
2	FLOOR COVER	1		TA10-12868-00
3	SEAT FRONT COVER	1		TA10-12882-00
4	SEAT REAR COVER	1		TA10-12883-00
5	Cabinet retainer	1		723-735
6	SEAT SLIDE COVER	2		TA95-12872-00
7	CASTER, SWIVEL 2-1/2", # 2G017	4	STC-75NM	VG24-02058-00
8	LEVELER, 5/8"-11x3 1/2"	4	D-B3 20×100	VG20-07415-14
9	VALVE, AIR - 4GA230-C6-E0N-4	1	4GA230-C6-E2N-4	TA92-12843-00
10	CYLINDER, AIR - SCA2-CA-40N-50	1	SCA2-CA-40N-50-B2-HL37250	TA92-12844-00
11	New joint (straight type)	2	GWS6-8	004-677
12	New joint (straight type)	1	GWS8-6	004-678
13	New joint (cheese type)	1	GWT8-0	004-670
14	TUBE,BLK,8mm OD,24"LG SOFT NYL	1	F-1508 L=500	TA92-12895-24
15	TUBE,BLK,6mm OD,12"LG URETHANE	2	NU-06 L200	TA92-12894-12
16	Fork position sticker	4		229-441
17	Warning sticker Maintenance (B) P (EXP)	1		461-663
18	DECAL, WARNING (DO NOT STEP)	1		VG40-06765-00
19	SEAT SLIDE UNIT	1	TSS15-72423805	TA05-12901-00
20	LINK BALL UNIT	1	RBI-14D	TA06-12869-00

10-9 Steering Assy

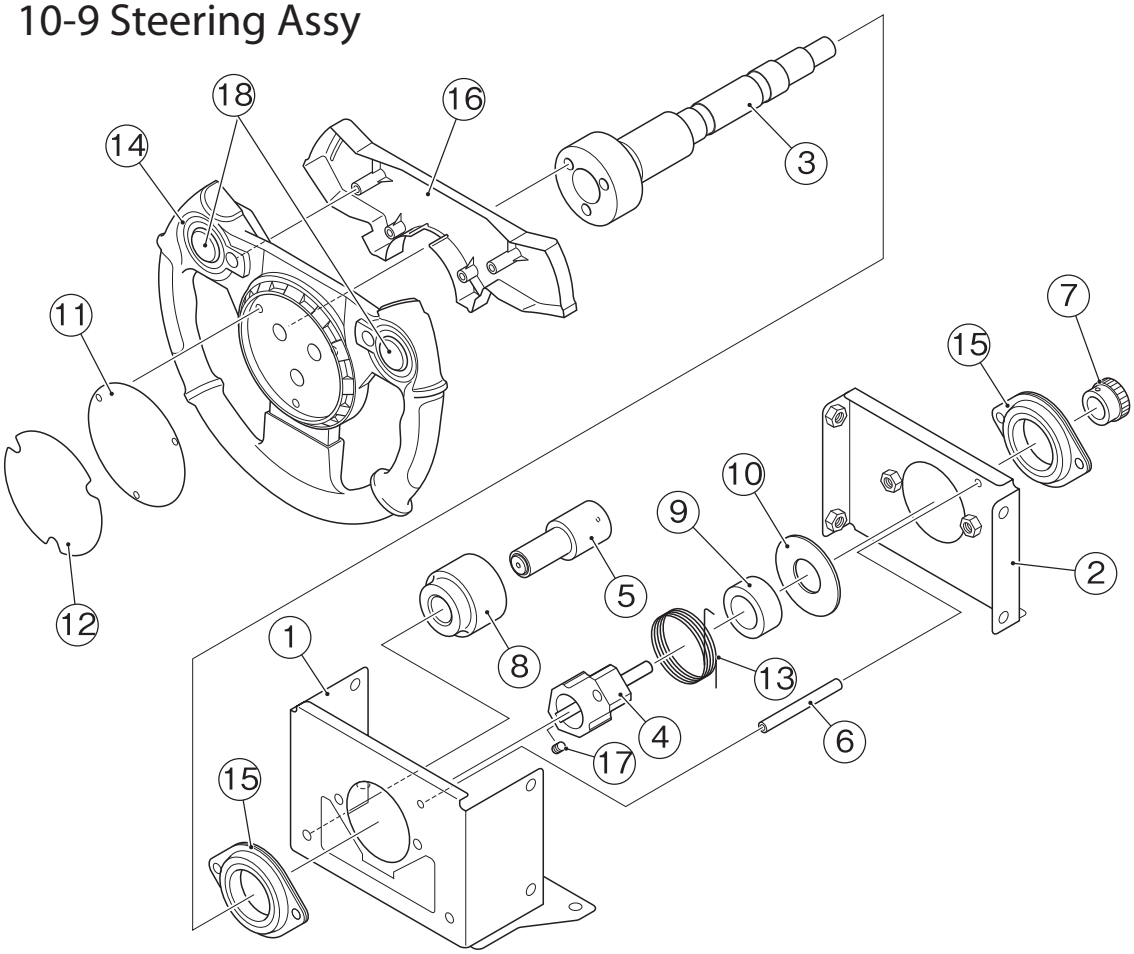

No.	Name	Qty.	Type and rating	Part No.
1	Steering box	1		723-745
2	Steering plate	1		723-746
3	Steering shaft	1		723-747
4	Stopper arm	1		723-748
5	Stopper shaft	1		723-749
6	Spring guide	1		723-750
7	Steering gear	1		723-751
8	Stopper rubber	1		723-752
9	Steering collar	1		723-753
10	Steering washer	1		723-754
11	Emblem plate	1		723-755
12	Steering decal	1		723-756
13	Steering spring	1		723-757
14	V352 Steering wheel	1		307-200
15	Steel housing unit	2	SBPFL205	103-095
16	Switch box	1		723-759
17	Round-end key	1	6×6×20 (S45C)	107-169
18	Illuminated switch	2	FP01-15CKC1RR	000-746

10-10 Slide Unit Assy

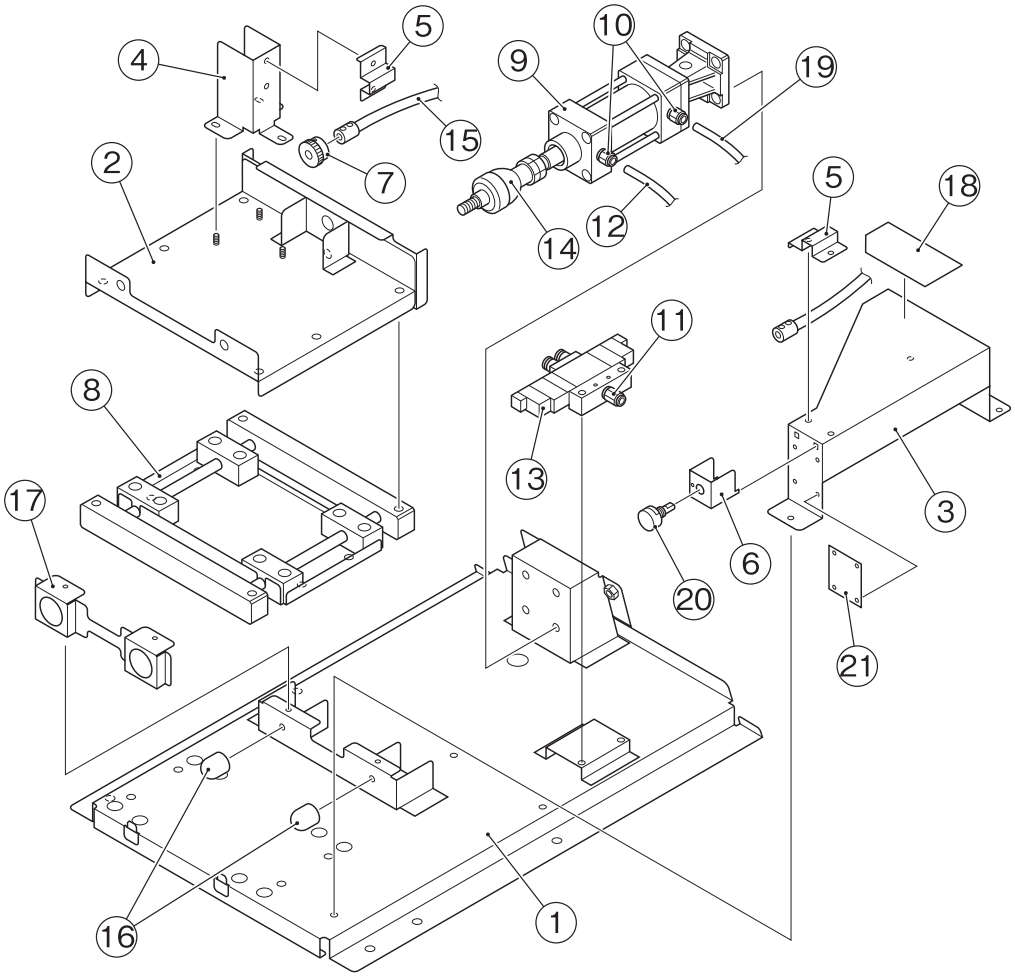

No.	Name	Qty.	Type and rating	Part No.
4	FLEXIBLE SHAFT BASE	1		TA10-12874-00
5	FLEXIBLE SHAFT BRKT.	2		TA10-12875-00
6	STEERING VOLUME BRKT.	1		TA10-12873-00
7	VOLUME GEAR	1		TA59-12871-00
8	SLIDE UNIT.	1	NAV172-000	TA06-12876-00
9	CYLINDER, AIR - SCA2-CA-40R-25	1	SCA2-CA-40R-25-B2-HL37249	TA92-12845-00
12	TUBE,BLK,6mm OD,10"LG URETHANE	2	NU-06 L220	TA92-12894-10
13	VALVE, AIR - 4GA230-C6-E0N-4	1	4GA230-C6-E2N-4	TA92-12843-00
14	LINK BALL UNIT	1	RBI-14D	TA06-12869-00
15	FLEXIBLE SHAFT	1	F-1367 L=500R	TA06-12870-00
16	RUBBER STOPPER	2	RI-25HD	TA96-12848-00
20	POT 1K,280DEG. EWSUGBF20E13	1	E WSUGBF20E13	VG75-07050-00
21	SWR PCB.	1		TA15-12877-00

10-11 Pedal A Assy

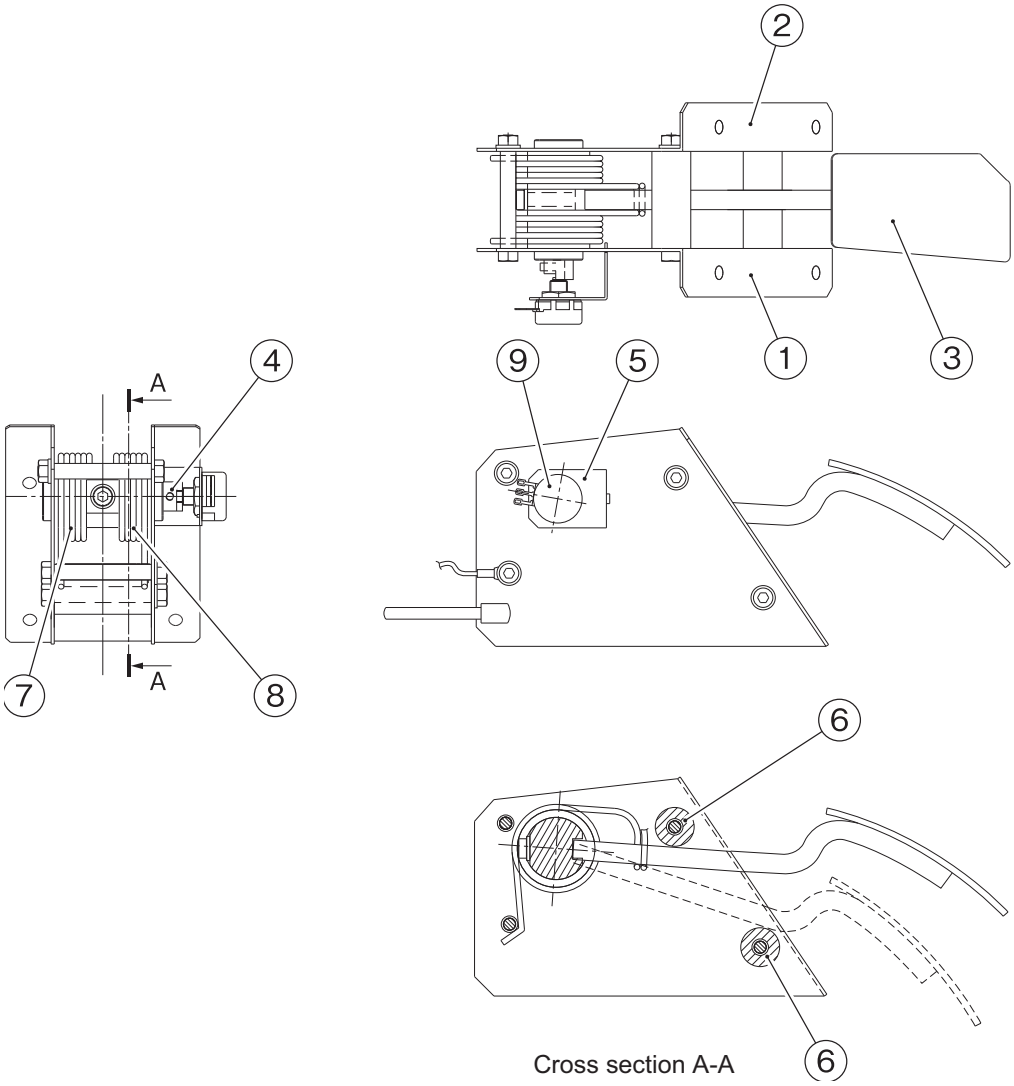

No.	Name	Qty.	Type and rating	Part No.
4	PEDAL, SHAFT	1		VG59-12770-00
5	BRACKET, POTENTIOMETER	1		VG10-12771-00
6	RUBBER, PEDAL BUSHING	2		VG96-12773-00
7	SPRING, PEDAL (RIGHT)	1		VG22-12772-00
8	SPRING, PEDAL (LEFT)	1		VG22-12772-01
9	POT,1K,40 DEG,#EIKQ28039321	1	EWSV7BF20E13 (40°)	VG75-05464-00
10	HARNESS, PEDAL ASSY. (TANK)	1		VG50-12774-00

10-12 Compressor Assy

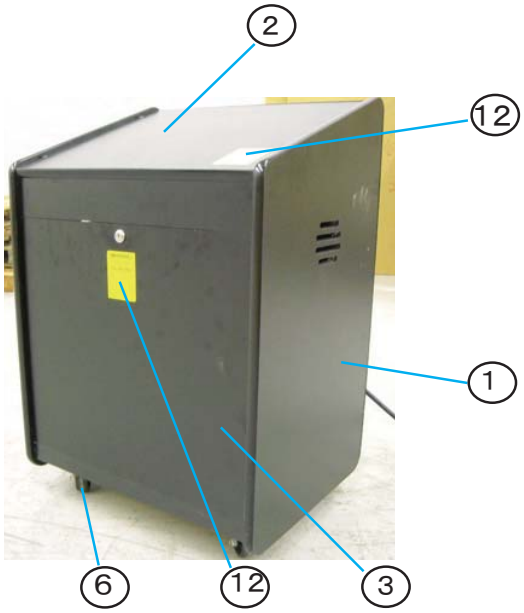

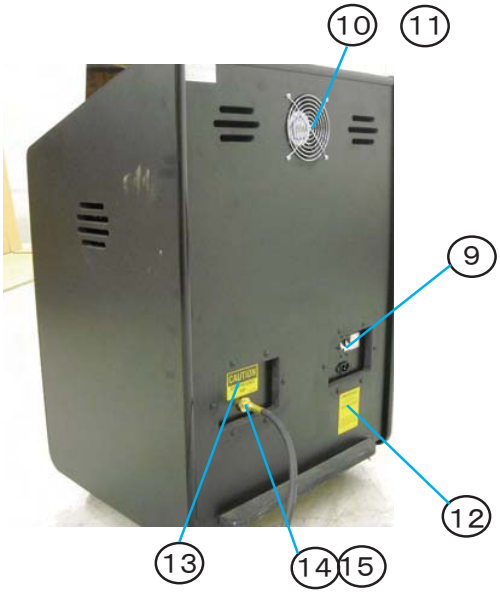

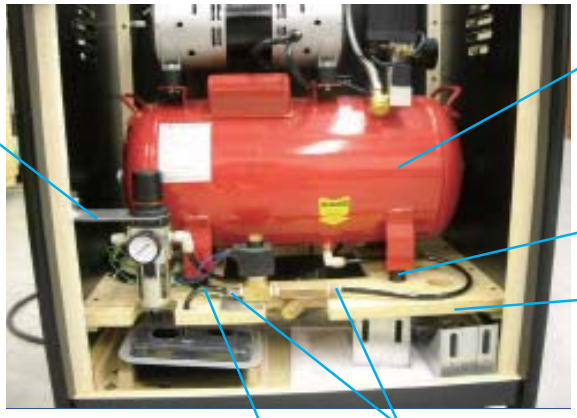

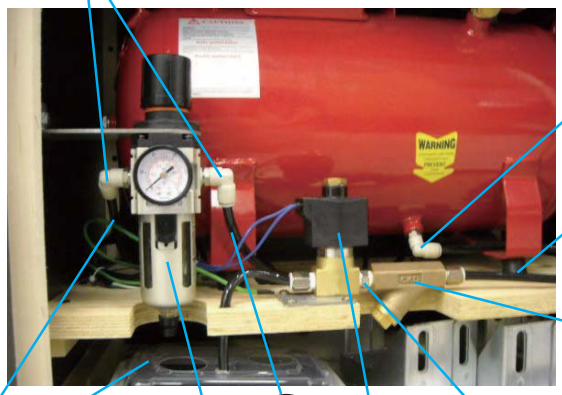

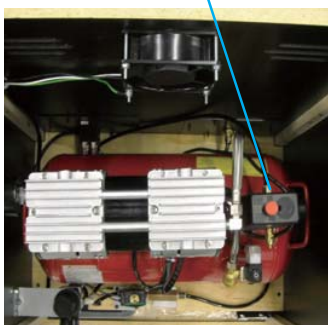

No.	Name	Qty.	Type and rating	Part No.
1	Cabinet	1		
2	Top Panel	1		
3	Maintenance Door	1		
4	Compressor Base	1		
5	Regulator Base	1		
6	Caster W/Stopper(swivel type)	4		
7	Vibration-isolation rubber	4		
8	AC cable	1	AC-CABLE-A-L3000	007-191
9	Circuit Breaker, 10AMP	1	MEB-50E 10A 30MA	VG65-07696-00
10	Fan,Axial,4",AC	1	4715HS-10T-B5A-B00	VG55-07827-00
11	Gurd(R) Fan 120MM 08130GN	1	8130-TR	VG55-06543-00
12	Label, Warning High Voltege	3		VG44-12423-00
13	Compressor sticker (EXP)	1		
14	Long Brass Bulk Head Fitting	1	28-301	TA92-12897-00
15	Swift Fit Tube Fitting	3	50000N-8-1/4	TA92-12899-00
16	Male Elbow	3	GWL8-8	TA92-12917-00
17	Male Straight	1	GWS8-8	TA92-12916-00
18	Soft nylon tube	1	φ8 L=20"	TA92-12895-28
19	Soft nylon tube	1	φ8 L=37"	TA92-12895-37
20	Soft nylon tube	2	φ8 L=8"	TA92-12895-08
21	Regulator, Filter	1	W3000-8-W-F1	TA92-12846-00
22	Y-type strainer	1		004-693
23	Nipple	1	G1/4	TA92-12908-00
24	Drainage Solenoid Valve	1		TA92-12891-00
25	Drip Pan	1		TA90-12892-00
26	Compressor, Oil Free	1		TA92-12842-00

10-13 Other repair parts

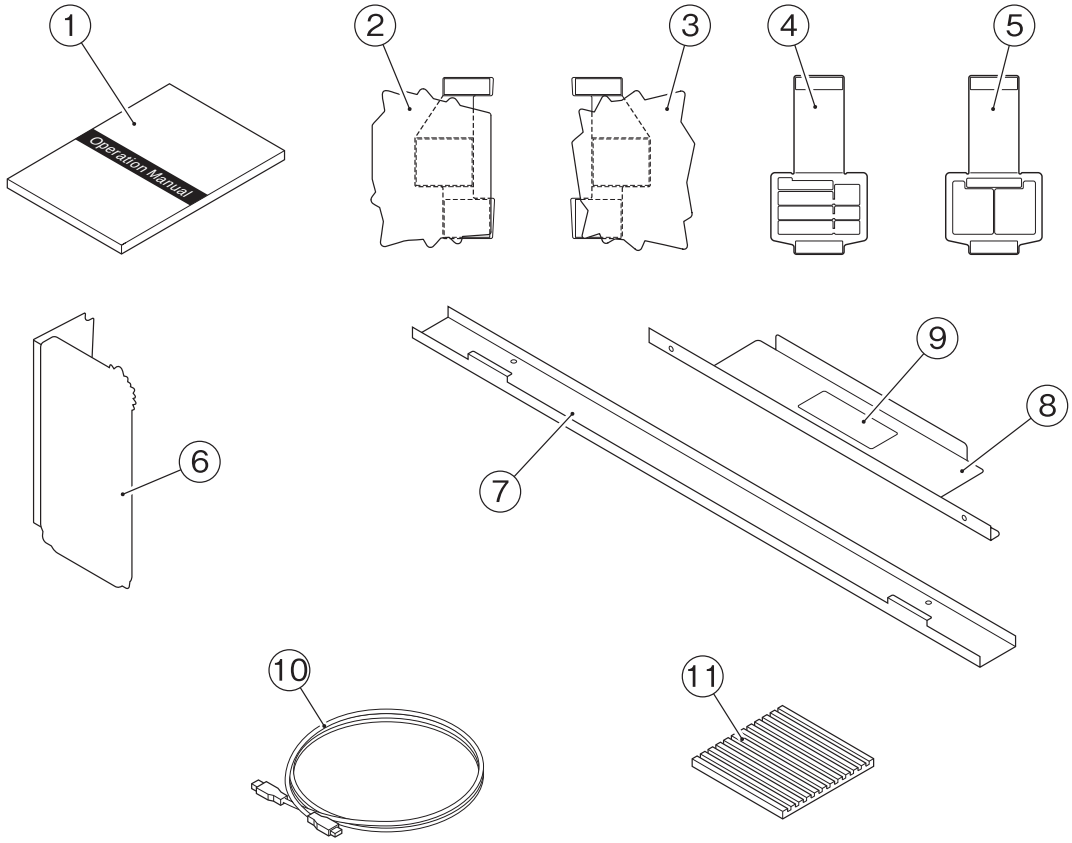

No.	Name	Qty.	Type and rating	Part No.
1	Operation manual	1	This operation manual	723-820
2	USP POP (EXP)	1		723-821
3	Awareness raising POP (EXP)	1		723-823
6	Game play instructions POP (EXP)	1		723-822
10	LAN cable	2	CAT5S-S	007-833
11	Vibration-isolation pad	4	KHL-10-100-0001	106-204

NOTES

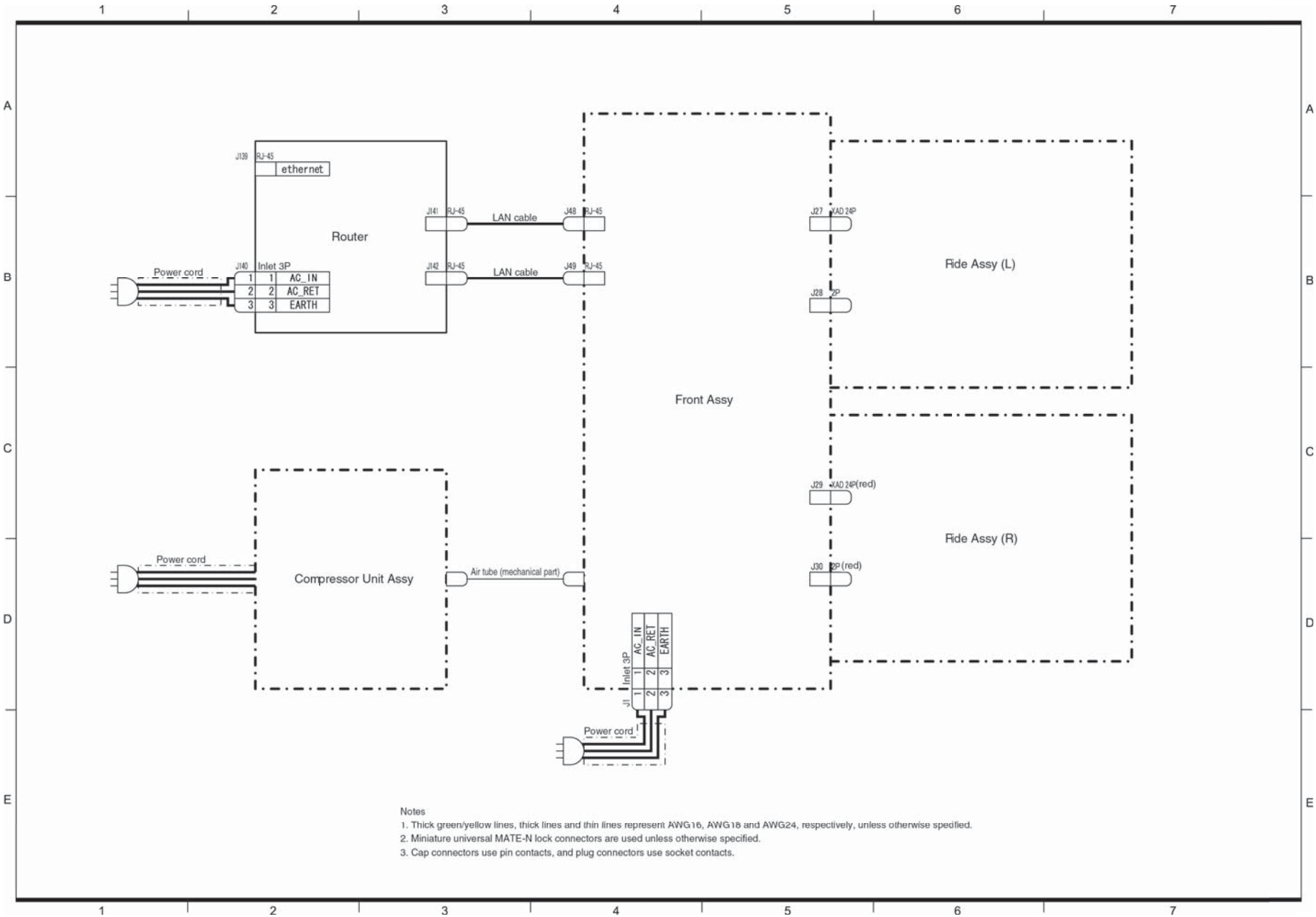

Notes
1. Thick green/yellow lines, thick lines and thin lines represent AWG16, AWG18 and AWG24, respectively, unless otherwise specified.
2. Miniature universal MATE-N lock connectors are used unless otherwise specified.
3. Cap connectors use pin contacts, and plug connectors use socket contacts.

2/5

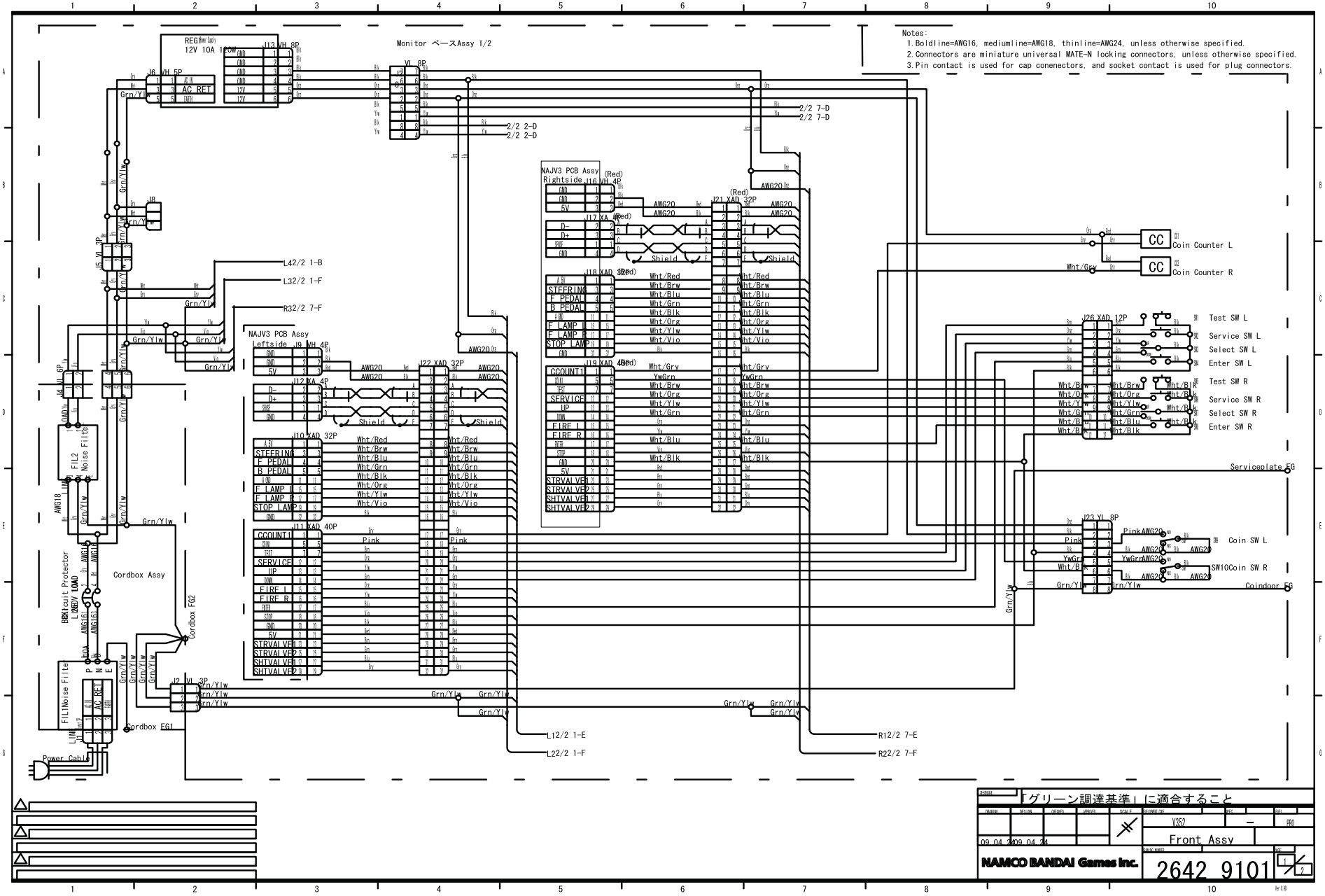
Notes:
1. Boldline=AWG16, mediumline=AWG18, thinline=AWG24, unless otherwise specified.
2. Connectors are miniature universal MATE-N locking connectors, unless otherwise specified.
3. Pin contact is used for cap conenectors, and socket contact is used for plug connectors.
Monitor ベースAssy 1/2
NAJV3 PCB Assy Rightside
NAJV3 PCB Assy Leftside
Cordbox Assy
Coin Counter L
Coin Counter R
Test SW L
Service SW L
Select SW L
Enter SW L
Test SW R
Service SW R
Select SW R
Enter SW R
Serviceplate FG
Coin SW L
Coin SW R
Coindoor FG
Power Cable
Cordbox FG1
Cordbox FG2
L42/2 1-B
L32/2 1-F
R32/2 7-F
L12/2 1-E
L22/2 1-F
R12/2 7-E
R22/2 7-F
「グリーン調達基準」に適合すること
Front Assy
NAMCO BANDAI Games Inc.
2642 9101

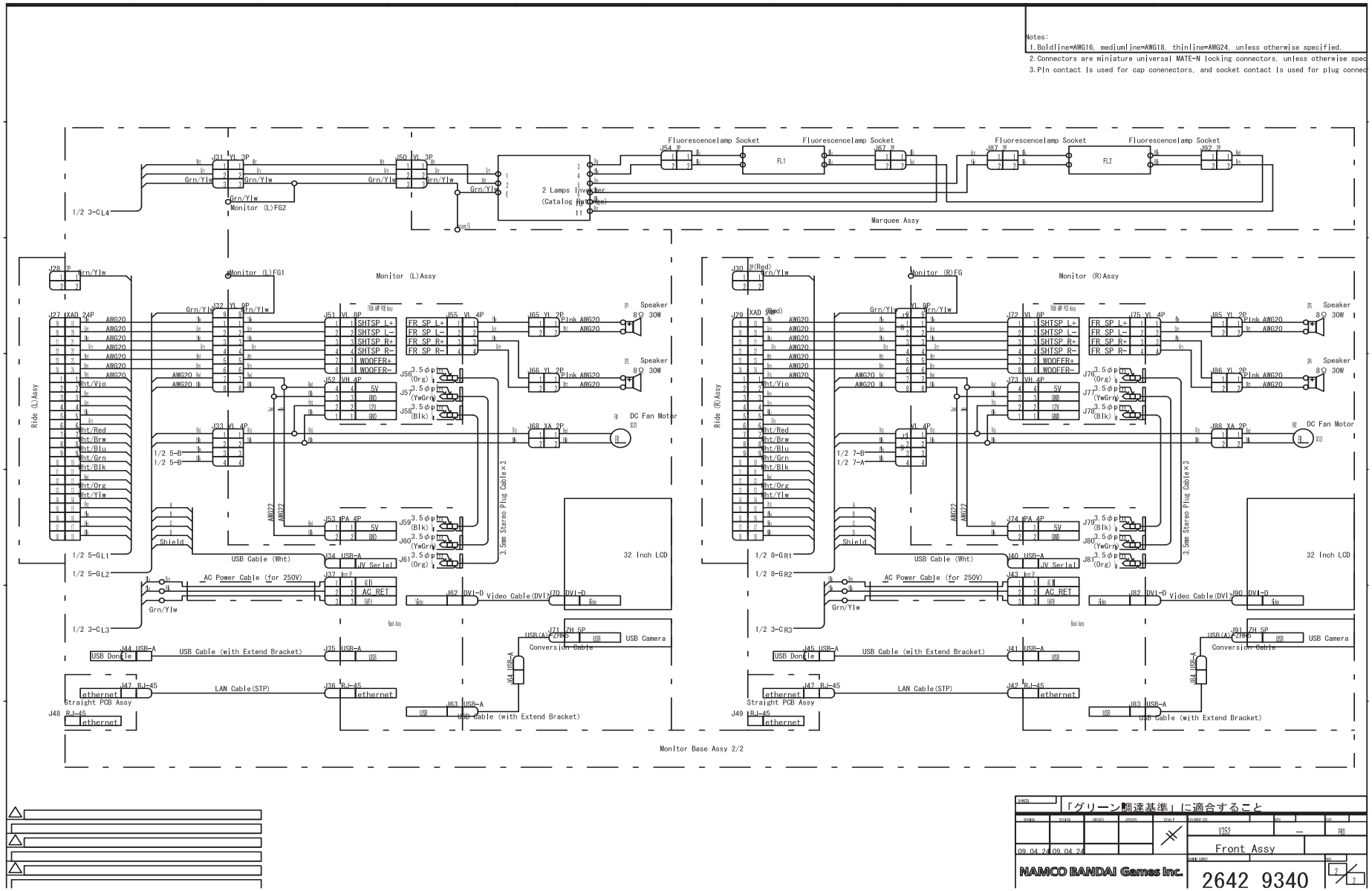
Notes:
1.Boldline=AWG16, mediumline=AWG18, thinline=AWG24, unless otherwise specified.
2.Connectors are miniature universal MATE-N locking connectors, unless otherwise spec
3.Pin contact is used for cap conenectors, and socket contact is used for plug connec
Fluorescencelamp Socket
FL1
FL2
2 Lamps Inverter
Marquee Assy
Monitor (L)Assy
Monitor (R)Assy
Ride (L)Assy
Ride (R)Assy
Speaker
8Ω 30W
DC Fan Motor
32 Inch LCD
3.5mm Stereo Plug Cable×3
USB Cable (Wht)
AC Power Cable (for 250V)
Video Cable(DVI)
USB Camera
Conversion Cable
USB Dongle
USB Cable (with Extend Bracket)
LAN Cable(STP)
Straight PCB Assy
Monitor Base Assy 2/2
「グリーン調達基準」に適合すること
Front Assy
NAMCO BANDAI Games Inc.
2642 9340

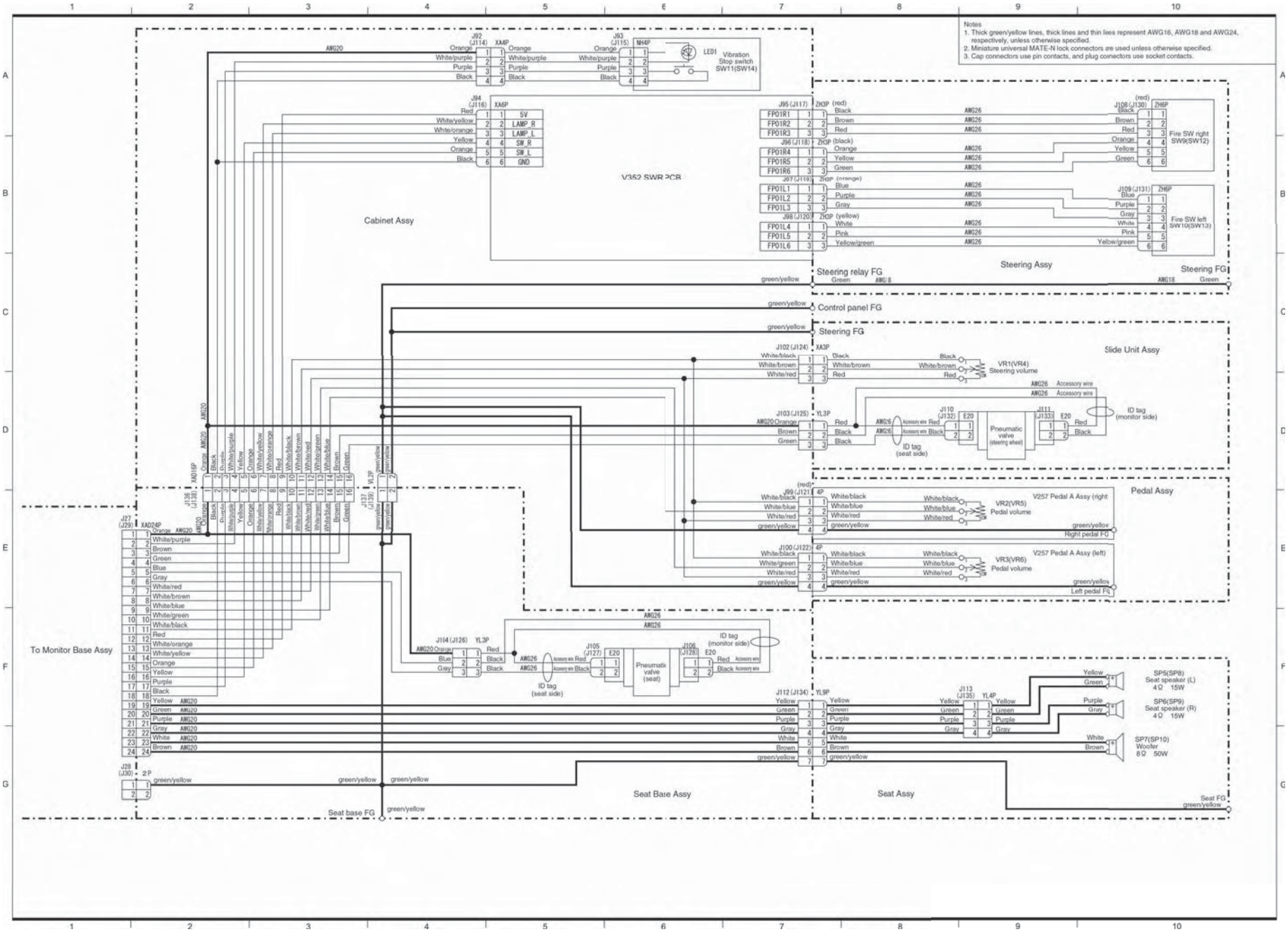
Notes
1. Thick green/yellow lines, thick lines and thin lines represent AWG16, AWG18 and AWG24, respectively, unless otherwise specified.
2. Miniature universal MATE-N lock connectors are used unless otherwise specified.
3. Cap connectors use pin contacts, and plug connectors use socket contacts.
Cabinet Assy
V352 SWR PCB
Steering Assy
Steering relay FG
Steering FG
Control panel FG
Slide Unit Assy
VR1(VR4) Steering volume
Pneumatic valve (steering wheel)
ID tag (monitor side)
ID tag (seat side)
Pedal Assy
V257 Pedal A Assy (right)
V257 Pedal A Assy (left)
VR2(VR5) Pedal volume
VR3(VR6) Pedal volume
Right pedal FG
Left pedal FG
Fire SW right SW9(SW12)
Fire SW left SW10(SW13)
Vibration Stop switch SW11(SW14)
LED1
To Monitor Base Assy
Pneumatic valve (seat)
SP5(SP8) Seat speaker (L) 4Ω 15W
SP6(SP9) Seat speaker (R) 4Ω 15W
SP7(SP10) Woofer 8Ω 50W
Seat Base Assy
Seat Assy
Seat base FG
Seat FG

Notes:
1. Boldline=AWG16, mediumline=AWG18, thinline=AWG24, unless otherwise specified.
2. Connectors are miniature universal MATE-N locking connectors, unless otherwise specified.
3. Pin contact is used for cap conenectors, and socket contact is used for plug connectors.

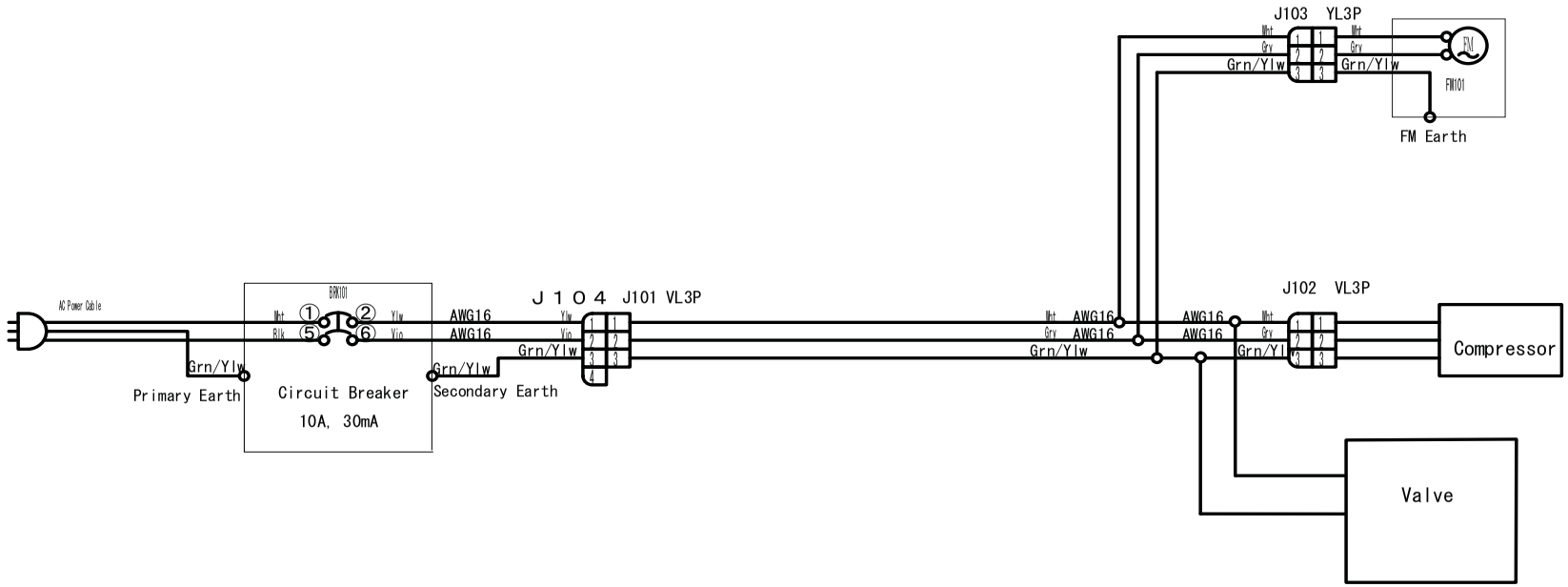

WARRANTY

Seller warrants that its printed circuit boards and parts thereon are free from defects in materials and workmanship under normal use and service for a period of ninety (90) days from the date of shipment. Seller warrants that its video displays (in games supplied with video displays) are free from defects in material and workmanship under normal use and service for a period of thirty (30) days from the date of shipment. None of the Seller's other products or parts thereof are warranted. Seller's sole liability shall be, at its option, to repair, replace, or credit Buyer's account for such products which are returned to Seller during said warranty period, provided:

a) Seller is promptly notified in writing upon discovery by Buyer that said products are defective.

b) Such products are returned prepaid to Seller's plant; and

c) Seller's examination of said products discloses to Seller's satisfaction that such alleged defects existed and were not caused by accident, misuse, neglect, alteration, improper repair, improper installation, or improper testing.

In no event shall Seller be liable for loss of profits. loss of use, incidental or consequential damages.
Except for any express warranty set forth in a written contract between Seller and Buyer which contract supersedes the terms herein, this warranty is in lieu of all other warranties expressed or implied, including the implied warranties of merchantability and fitness for a particular purpose, and all other obligations or liabilities on the Seller's part, and it neither assumes nor authorizes any other person to assume for the Seller any other liabilities in connection with the sale of products by Seller.
Namco America Inc. distributors are independent, being privately owned and operated. In their judgment they may sell parts or accessories other than Namco America Inc. parts or accessories. Namco America Inc. cannot be responsible for the quality, suitability or safety of any non-Namco America Inc. part or any modification including labor which is performed by such distributor.

SERVICE

If you have questions regarding any **Namco America Inc.** product or require technical support:
Contact **Namco America Inc.** Customer Service at:
1 (847) 264-5610 or FAX 1 (847) 264-5611
Hours: 9:00 am - 5:00 pm CDT
Parts and repair services for **Namco America Inc.**
products are available through your distributor.

Ray Tanzer
Technical Director

Steve Ignarski
Part Sales Representative
847.264.5612

Wayne Steffl
Field Service Technician
847.264.5614

© NAMCO BANDAI Games Inc.

Part No.: TA45-12767-00
First Edition Published in Feb 2010

Namco America Inc.

951 Cambridge Drive
Elk Grove Village, IL 60007-2434

Fax: 847.264.5613

The specifications of the machine and the contents of this operation manual are subject to change without prior notice due to product improvements.